CITY OF WAYNE

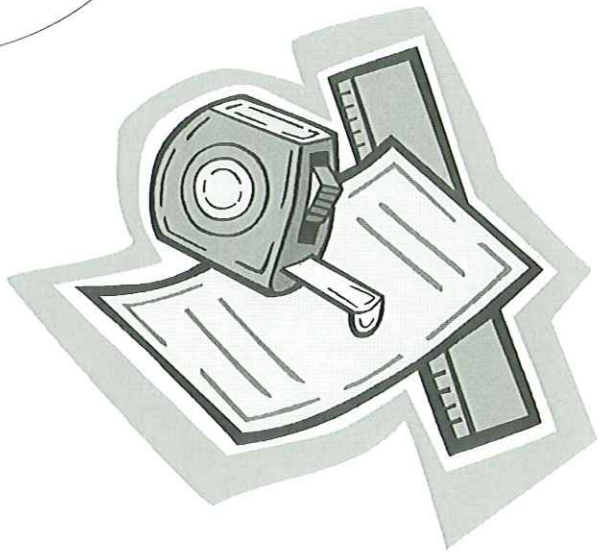

Building Permit Packet
Application & Related Information

NOTE: Plan review and permit issuance may take up to 10 (ten) working days.

Last Updated July ~ 2013

City of Wayne

Incorporated · February 2, 1884

306 Pearl • P.O. Box 8
Wayne, Nebraska 68787

(402) 375-1733
Fax (402) 375-1619

NOTICE OF RECEIPT

I/We, _____, do hereby certify to the following:

- I/We have received, read, and examined the NOTICE TO CONTRACTORS packet, including the Building Permit Deposit Fee information, and do hereby understand what is required for submission of a building permit application.
- I/We, further agree that no portion of the proposed structure covered by this building permit will be occupied until a final inspection has been conducted by the City of Wayne Building Inspection Department, and an occupancy certificate issued.
- I/We, further acknowledge that I/we have received a copy of Article 13 State Highways, specifically sections 39-1311 through 39-1311.05, as it relates to the Highway 35 Expressway project. (May or may not be applicable to your specific project.)
- I/We further acknowledge that up to ten (10) working days may be required for plan review and permit issuance.

_____ _____
Owner Date

_____ _____
Contractor Date

City of Wayne

Incorporated - February 2, 1884

306 Pearl • P.O. Box 8
Wayne, Nebraska 68787

(402) 375-1733
Fax (402) 375-1619

BUILDING PERMIT DEPOSIT FEE INFORMATION

On March 15, 2011 the Wayne City Council approved Resolution No. 2011-17, which amended the deposit fee for building permits and a penalty for obtaining no building permit.

The amended deposits became effective March 15, 2011 with the following:

1. Building Permit Cash Deposit:
   a. On a project valued at $50,000 or less $100.00
   b. On a project valued over $50,000 $250.00

2. The cash deposit shall be forfeited to the City if the contractor fails to call the Building Official to request the required inspections as noted on the building permit card.

3. Upon forfeiture of the building permit cash deposit, a new cash deposit of the same amount shall be required before construction can continue.

4. The building permit cash deposit shall not be waived.

5. The cash deposit shall be returned to the owner or contractor as stated on the building permit application within two business days after issuance of the Certificate of Occupancy.

The following became effective immediately upon passage of Resolution No. 2007-86 (the original resolution which established the deposits): the penalty for no building permit shall be two times the building permit fee.

Further, any building permit plans submitted, the initial review of the plans shall be at no cost. Any subsequent plan review (for changes, additions, revisions) shall be subject to a non-refundable charge of $35 for the first hour of review and $25 per hour thereafter, plus any expenses incurred.

City of Wayne

Incorporated · February 2, 1884

306 Pearl • P.O. Box 8
Wayne, Nebraska 68787

(402) 375-1733
Fax (402) 375-1619

NOTICE TO CONTRACTORS

This office will no longer conduct a string line / batter board inspection prior to excavation, unless otherwise noted by the Building Official.

This office will not conduct an inspection unless the Building Permit card is posted at the construction site or made available at the time of inspection (for both Residential and Commercial).

No rough-in inspections will be conducted on any commercial projects until plans for such project have been reviewed and approved by the State Fire Marshal and a rough-in inspection conducted and signed off by the respective entities (State Fire Marshal and/or State Electrical Inspector).

Further, this office will not conduct a final inspection until the State Electrical and/or State Fire Marshal's office has signed off on the Building Permit card in their respective places.

Please note that stated on the Building Permit is the following:

> *"Approved plans MUST be retained on the job and this card KEPT POSTED until final inspection has been made."*

If you, as the contractor, will not be available at the time of inspection, please notify this office where the Building Permit card can be found, for signature of approval or disapproval.

The City of Wayne is currently using the 2006 International Building Code, 2006 International Residential Code, 2006 International Plumbing Code, 2006 International Mechanical Code, 2006 International Property Maintenance Code, 2006 International Energy Conservation Code, and 2008 National Electrical Code.

Should you have any questions, please contact the Building Inspection Department at 375-1733.

Minimum Plan Submittal Requirements
Residential Construction

Revised ~ February, 2010

Coversheet:

1. ___ Project identification.
2. ___ Project address and location map.
3. ___ All design professionals identified, including but not limited to, contractor, electrician, plumber

Site Plan: (Required for new structures or additions or reuse of structures under use or special permit, etc. approvals)

1. ___ Proposed new structure.
2. ___ Existing buildings and other structures.
3. ___ Property lines with distances to streets, easements, setbacks, and building location.
4. ___ Streets, easements and setbacks.
5. ___ Water, sewer, electrical.
6. ___ North Arrow.
7. ___ Scale.
8. ___ Curb cut information, if applicable

Floor Plan: (Must be drawn to scale, preferably ¼" or ½")

1. ___ All floors, including basement.
2. ___ All rooms, currently/proposed use of each, room dimensions and room names, including room area
3. ___ Location of structural elements and openings.
4. ___ Doors and windows; location, size swing, hardware.
5. ___ Decks or porches, including stairs to ground elevation.
5. ___ Fire assemblies, separations.
6. ___ Identify new/existing walls, call out construction of new walls.
7. ___ Stairways, including rise, run, and overhead clearances
8. ___ Location of smoke detectors, all levels

Foundation Plan (please see the packet):**

1. ___ All footings and foundations.
2. ___ Size, location, thickness, materials, strengths, reinforcing.
3. ___ Imbedded anchoring.
4. ___ Foundation drain
5. ___ Radon System

Framing Plans Roof Framing Plans:

1. ___ All floor, roof, and ceiling structural members.
   a. ___ Material size, spacing, grade and species (if available).
   b. ___ Methods of attachment
   c. ___ Hurricane clips
   d. ___ Design roof truss / rafter, including girder truss systems calculation sheet
2. ___ Attic / soffit ventilation areas for both
3. ___ Design floor truss, I-joist or laminated joist systems calculation sheet
4. ___ Fire wall separation, if required (Two-family or greater)

Building Sections & Wall Sections (please see the packet)**:

1. ___ Show materials of construction.
2. ___ Fire rated assemblies, if required
3. ___ Dimensions

Final Checklist:

1. ___ Kitchen Layout
2. ___ Mechanical System
3. ___ Plumbing System
4. ___ Electrical System
5. ___ Structural Calculations
6. ___ Detail Drawings of trusses
7. ___ Notification to Diggers Hotline
8. ___ Plans MUST Be Prepared & Sealed by the Registered Architect and Engineer of Record, if applicable
9. ___ Energy Code Compliance information from REScheck (www.energycodes.gov/REScheck), if applicable to project.

***NOTE**: Please see the building permit packet for example drawings. Feel free to use these drawings if they apply to your project.*

COMMERCIAL PLAN REVIEW CODE CHECKLIST

Revised ~ February, 2010

PLAN #_____ ADDRESS_____
DATE RECEIVED _____ DATE REVIEWED_____
REVIEWER _____

ZONING:

Classification _____
Is use allowed _____
Future highway right-of-way_____
Front yard setback _____
Rear yard setback _____
Required parking count _____
Parking lot lighting _____
Airport noise_____
Airport sound district _____
Historic district _____
Open space requirements _____
Signage/awning/canopy_____

Abutting zoning districts_____
Special permit _____
Building line district _____
Side yard setback _____
Maximum height allowed_____
Parking count actually provided_____
Parking lot paving _____
Airport zoning _____
Capital environs_____
Lot area _____
Flood plain_____

BUILDING CODE:

Occupancy type(s)_____
Type of fire sprinkler system _____
Fire alarm system _____
Actual number of stories _____
Actual height _____
Exterior wall protection_____
Parapets_____
Rated assemblies per construction type ___
Allowable area increases:
Open Space_____
Sides _____
% _____
Fire sprinkler increase _____
300% single story / 200% multi-story
Basement area_____
Upper floor(s) area_____
Area separation wall(s) _____
First floor occupant load_____
Total building occupant load _____
Exits:
Required number _____
Travel distance _____
Adjoining rooms _____
Property line _____
Exit sign _____
Corridor width _____
Rated corridor doors _____
Dead-end corridors _____

Construction type_____
Occupancy separations_____
Stand pipe _____
Number of stories allowed_____
Maximum height allowed_____
Opening protection in exterior walls ____
Projections beyond exterior walls _____
Basic allowable floor area _____
Allowable area per floor_____
Multilevel increase_____
Total allowable building floor area_____
Check allowable floor area if mixed occupancies _____

First floor area _____
Total area (excluding basement)_____
Basement occupant load_____
Upper floor occupant load _____

Required width_____
Exit separation_____
Door swing_____
Hardware_____
Exit illumination _____
Rated corridors _____
Corridor HVAC fire/smoke dampers ____

Stairs:

Required number _____
Space under stairs _____
Headroom _____
Guardrails _____
Distance between landings _____
Ramps _____

Rated enclosure _____
Rise/Run _____
Handrails _____
Landing size _____
Stair to roof _____

Miscellaneous:

Interior finish _____
Usable space under first floor _____
Fire stop assemblies _____
Roof covering _____
Light & Ventilation _____
Insulation _____
Foam plastics _____
Boiler separation _____
Americans w/Disabilities Act _____
Safety glazing (fire rated) _____
Shaft ratings _____
Special occupancy requirements _____

Treated sills _____
Attic access _____
Draft stops _____
Roof drainage _____
Smoke detection _____
Smoke vents _____
Fire assembly numbers _____
Toilet fixture count (per plumbing code) _____
Architect/Engineer seals _____
Fire and/or smoke dampers _____
Projections beyond property line _____

*Energy Code Compliance information from COMcheck, if applicable (www.energycodes.gov/COMcheck)

EXAMPLE SITE PLAN DIAGRAM FOR DETACHED ACCESSORY BUILDINGS AND ADDITIONS TO EXISTING RESIDENCES IN THE R-1 ZONE

PLEASE BE AWARE OF INFORMATION BELOW

MINIMUM LOT REQUIREMENTS ARE AS FOLLOWS:

A. Front yard setback:
B. Side yard setback:
C. Rear yard setback:
Note: Buildings are not allowed in any easement.
D. The depth of the rear yard must be at least twenty percent (20%) of the depth of the lot, but such depth need not be more than 35 ft.
E. Buildings on corner lots must provide a side yard (second front) on the street side of not less than thirty (30) feet.

A SITE PLAN SHOULD BE SUBMITTED WITH EACH BUILDING PERMIT

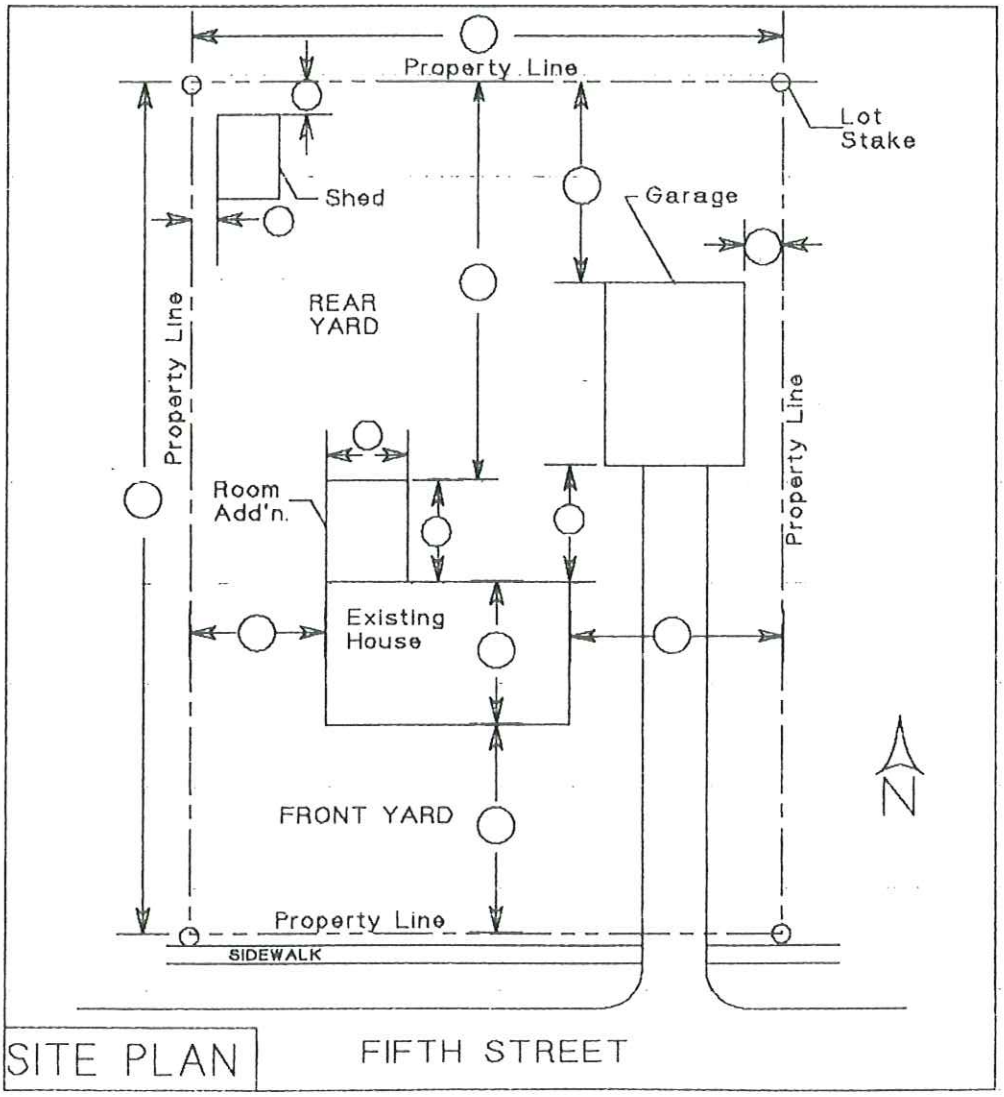

SECTION VIEW

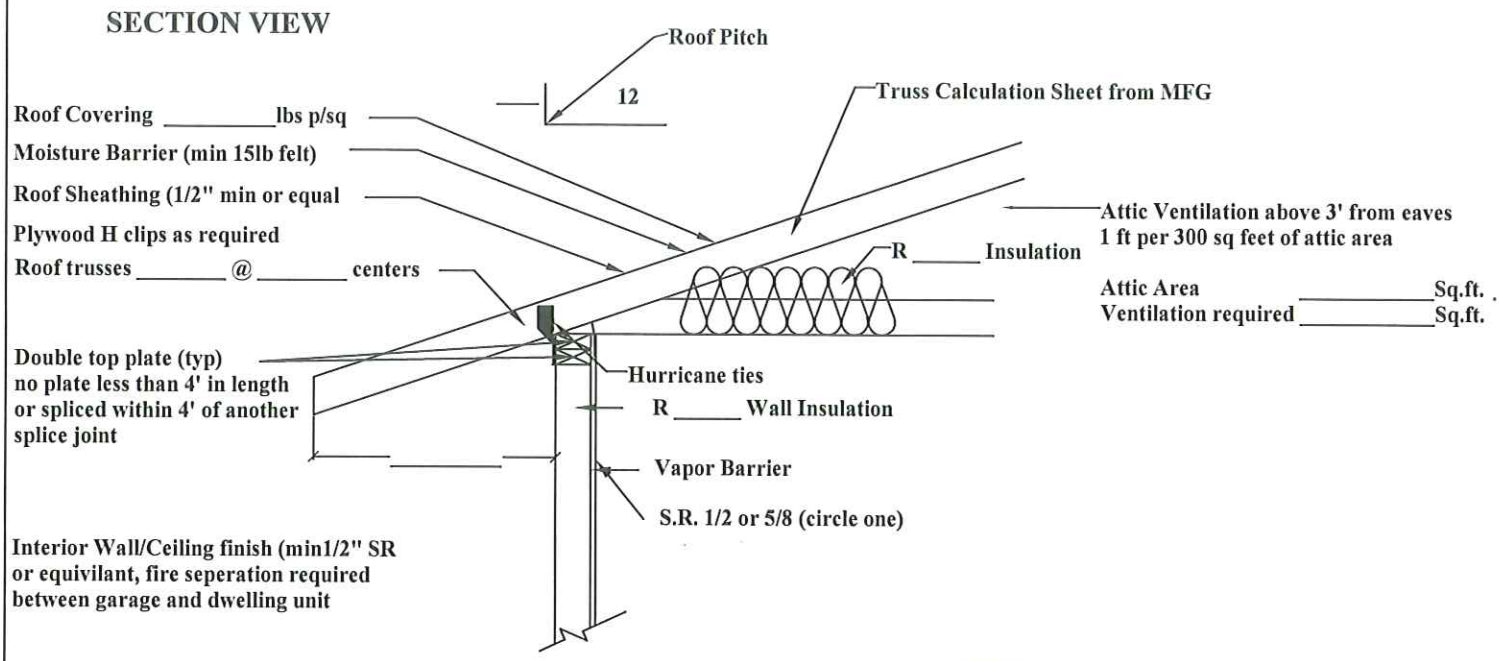

Exterior Sheathing min 7/16 Plywood or equivelent

Slab on Grade

Conditioned or Heated Space

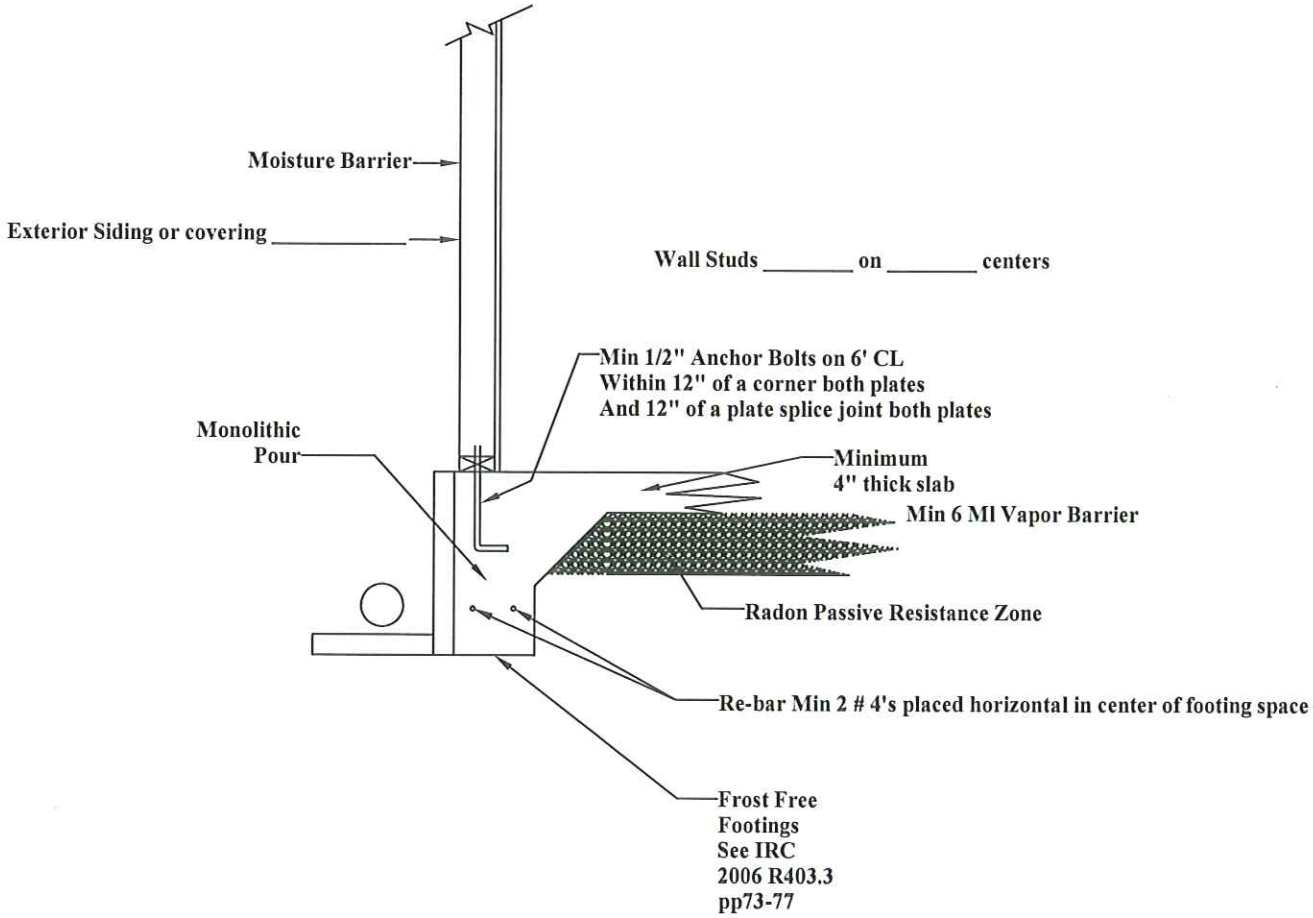

SECTION VIEW

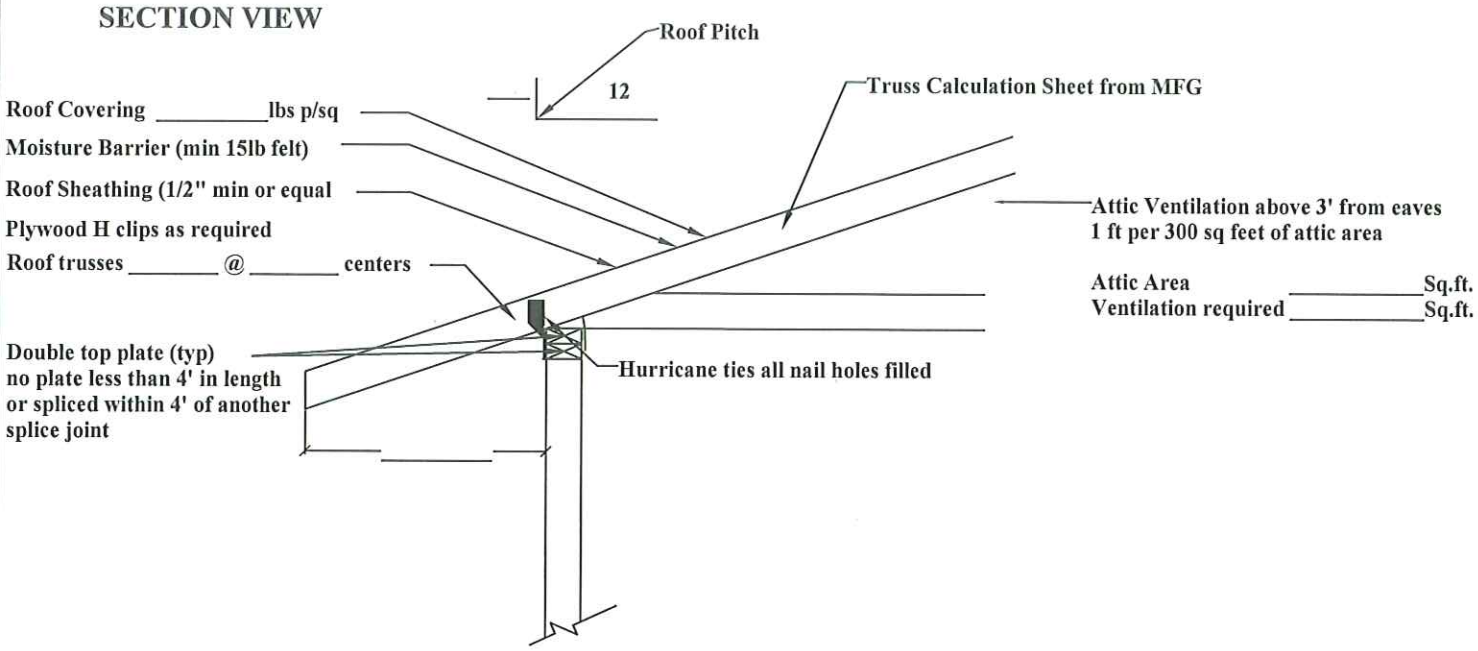

Slab on Grade

Exterior Sheathing min 7/16 Plywood or equivelent

Unconditioned Space (Garage or tool shed)

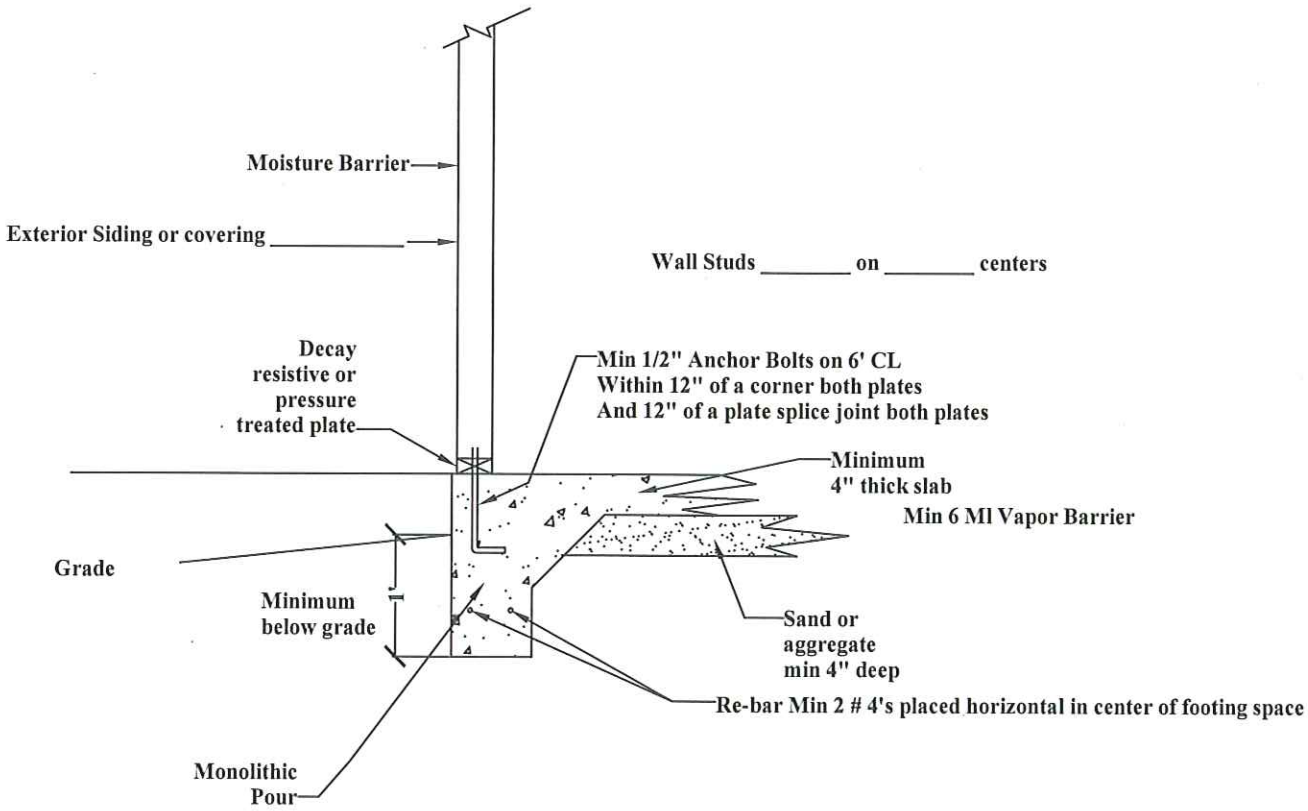

Typical Garage With Shallow Footings

SECTION VIEW

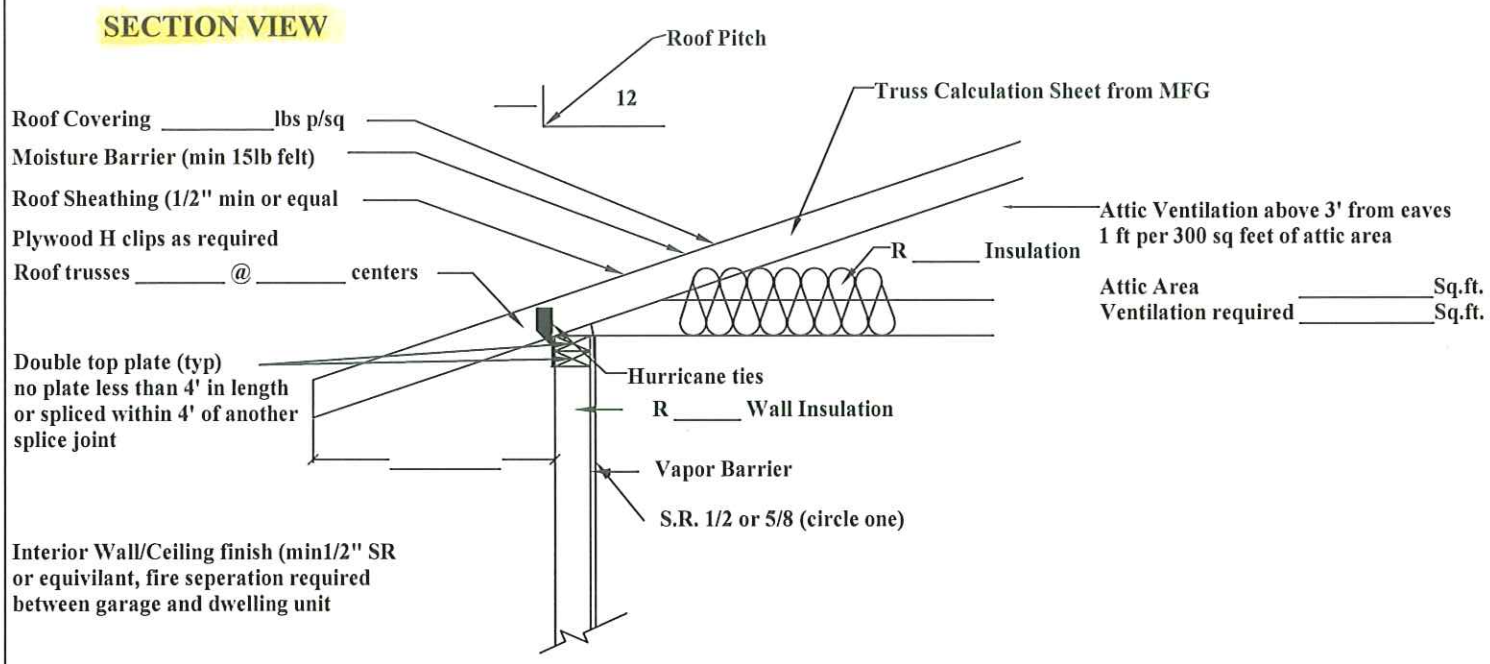

Exterior Sheathing min 7/16 Plywood or equivelent

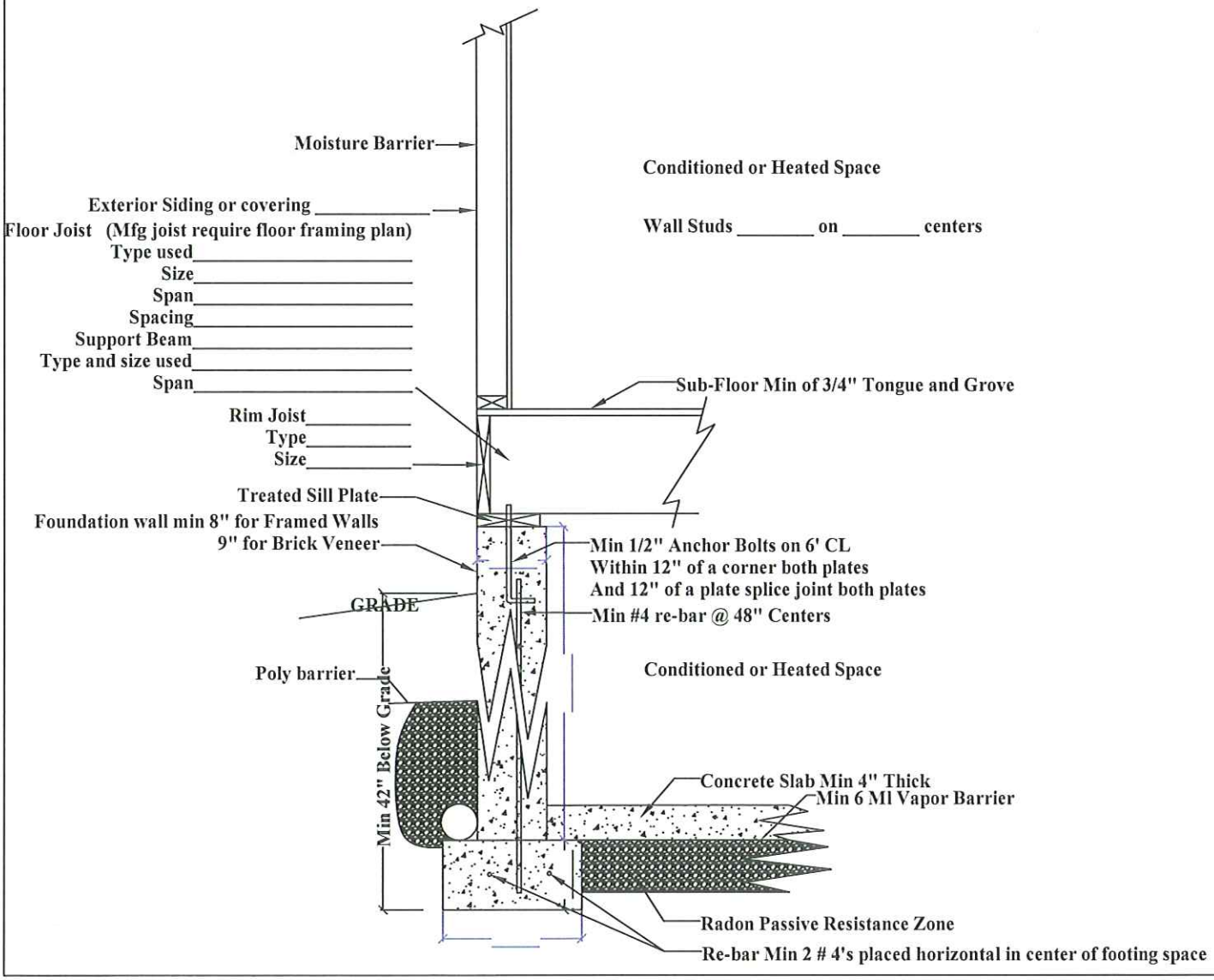

Building Guide

Single Family Residential Uncovered Decks and Porches

How to Use this Guide

Provide two sets of plans and complete the following:

1. Complete this Building Guide by filling in the blanks on page two, and indicating which construction details will be used.

2. Provide 2 Plot Plans (site plan) showing dimensions of your project or addition and its relationship to existing buildings or structures on the property and the distance to existing property lines drawn to scale.

3. Fill out a building permit application.

The majority of permit applications are processed with little delay. The submitted documents will help determine if the project is in compliance with building safety codes, zoning ordinances and other applicable laws.

This information is for reference purposes only. If you wish to use as part of your submittal documents, please complete the blanks and submit with the remaining building permit packet application.

Single Family Residential Uncovered Decks and Porches

Directions

1. Fill in the blanks on pages 2 and 3 with dimensions and materials which will be used to build the structure. Please print legibly.
2. Indicate in the check box which detail from page 3 will be used.

Address: _____

Size and Amount of Lags _____
(example: Two 3/8"x 4 1/2" lags @ 16" O.C.)

Type of decking ____x____ - _____
(example: 1 x 4 or 2 x 6 - Trex)

Deck Section

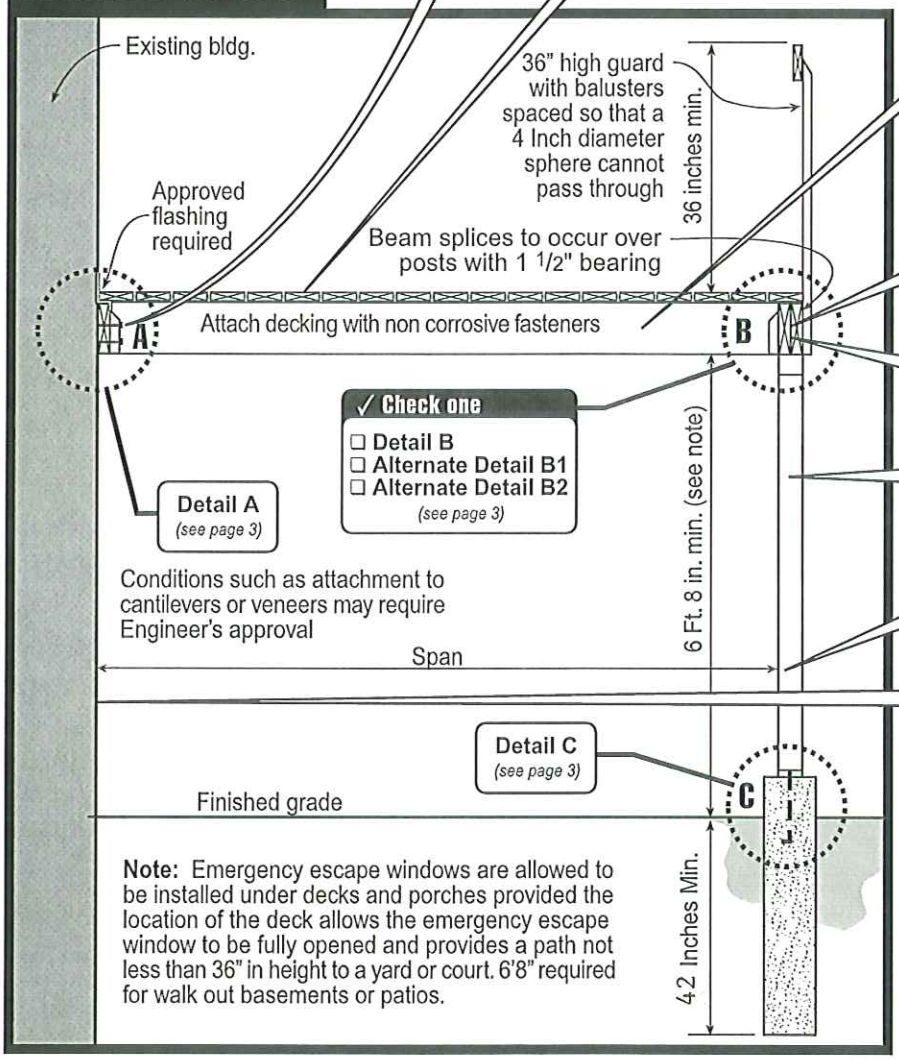

✓ Check one
- ☐ Detail B
- ☐ Alternate Detail B1
- ☐ Alternate Detail B2

(see page 3)

2x_____ joists spaced _____" apart
(example: 2 x 10" spaced 24" apart)

(__)_____x____beam
(example: (2) 2 x 10 - see detail B)

2x____ rim joist
(example: 2 x 10 - see Alternate B1 & B2)

____x____ posts spaced _____ apart
(example: 4 x 4 posts spaced 8' apart)

Span _____
(example: 13' - 4")

Type of siding *(existing)*
_____

Note: A plot plan (plan view) showing the dimensions of your project or additions and its relationships to existing buildings or structures on the property must be included. In addition to project dimensions, your plot plan must also show other details such as post locations and spacing, joist and beam spans, and any other pertinent information not shown on the section drawing.

Single Family Residential Uncovered Decks and Porches

Detail A

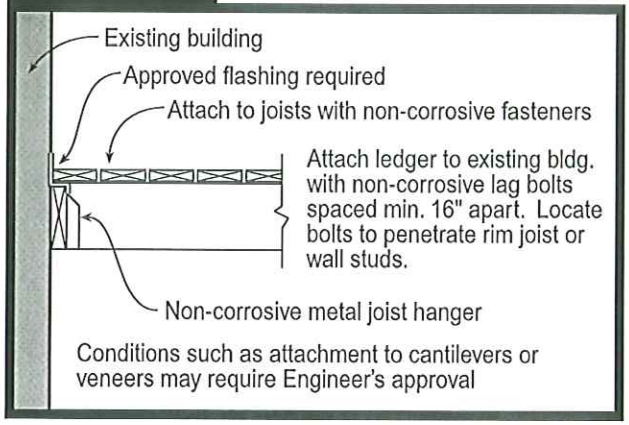

Detail B

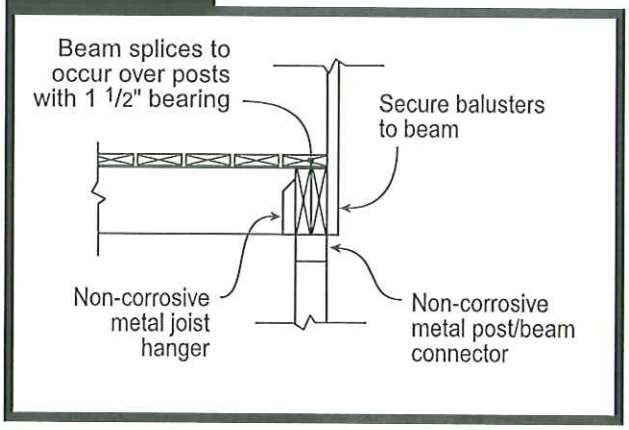

Alternate Detail B1

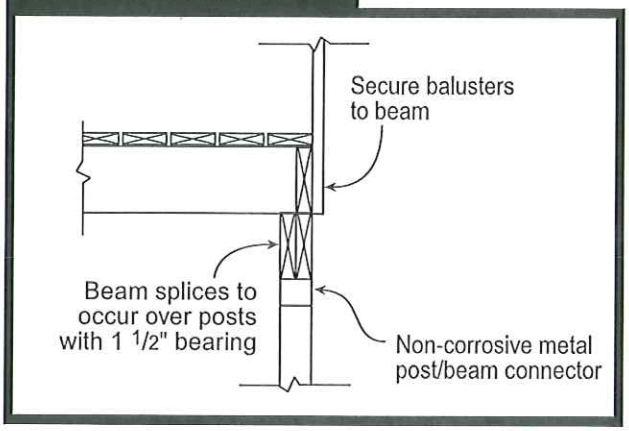

Alternate Detail B2

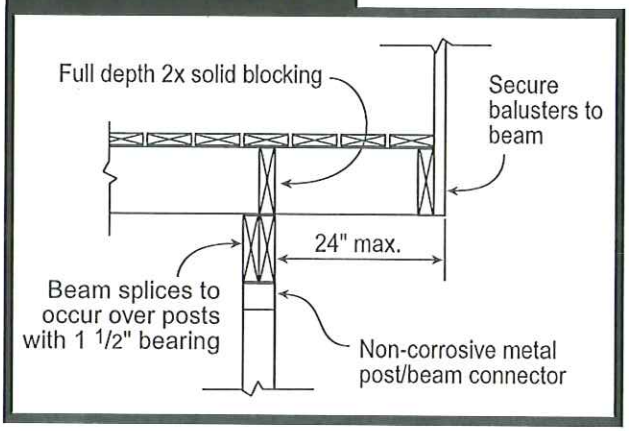

Detail C

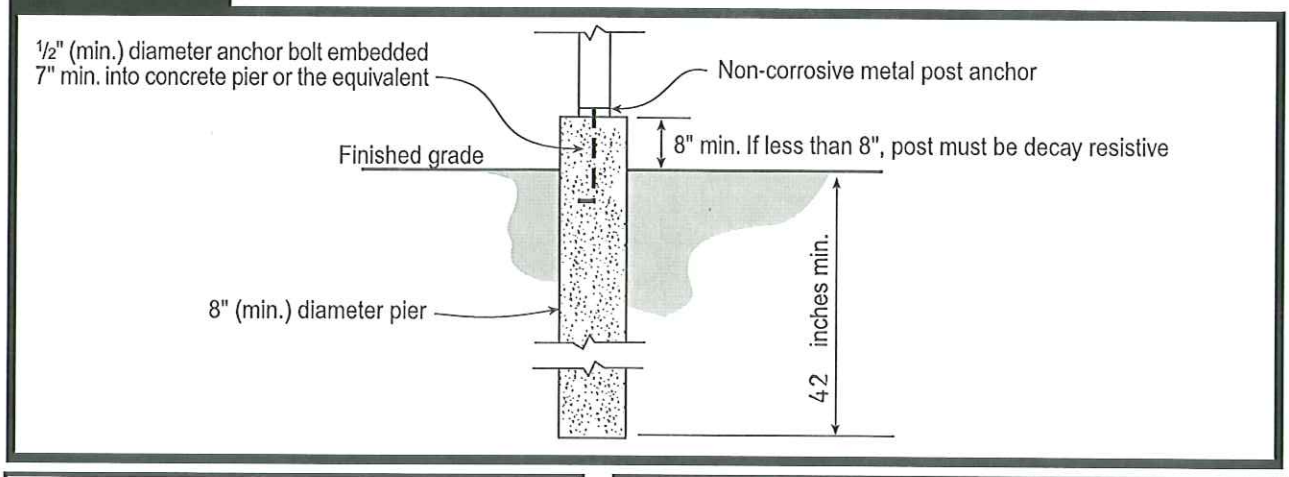

Single Family Residential Uncovered Decks and Porches

Stair & Handrail Specifications

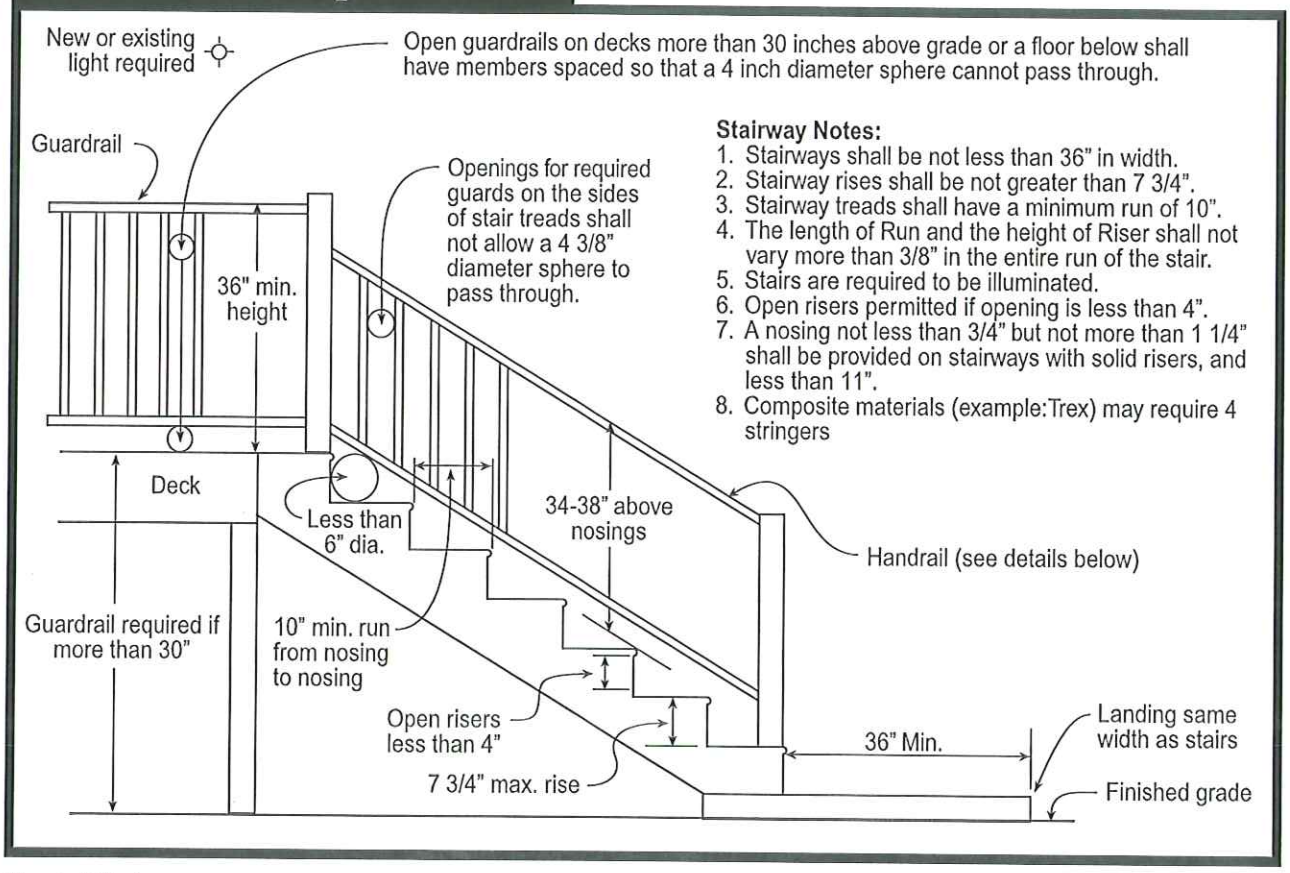

Stairway Notes:

1. Stairways shall be not less than 36" in width.
2. Stairway rises shall be not greater than 7 3/4".
3. Stairway treads shall have a minimum run of 10".
4. The length of Run and the height of Riser shall not vary more than 3/8" in the entire run of the stair.
5. Stairs are required to be illuminated.
6. Open risers permitted if opening is less than 4".
7. A nosing not less than 3/4" but not more than 1 1/4" shall be provided on stairways with solid risers, and less than 11".
8. Composite materials (example:Trex) may require 4 stringers

Handrail Notes:

1. Handrails shall be continuous on at least one side of stairs with 4 or more risers.
2. Top of the handrails shall be placed not less than 34 inches nor more than 38 inches above stair nosings.
3. The handgrip portion of handrails shall be not less than 1-1/4 inches nor more than 2 1/4 inches in cross section for non circular handrails.
4. Handrails shall be placed not less than 1-1/2 inches from any wall or other surface.
5. Handrails to be returned to wall, post or safety terminal (per 311.5.6.2 IRC)

Acceptable Handrail Details

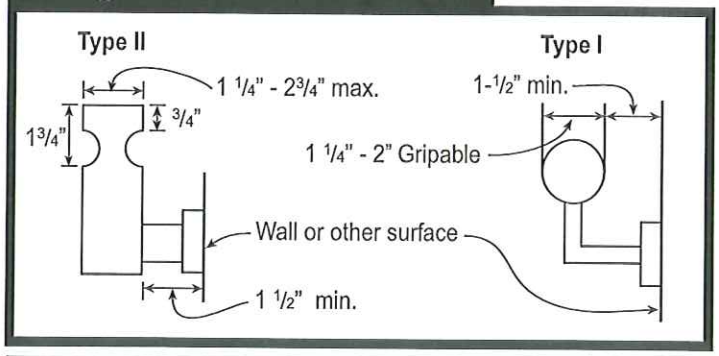

Unacceptable Handrails

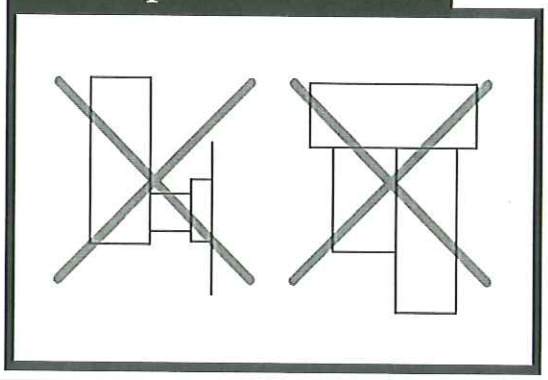

DECK AND STAIR DETAIL
SAMPLE Sectional View

SCALE 1/4" = 1'

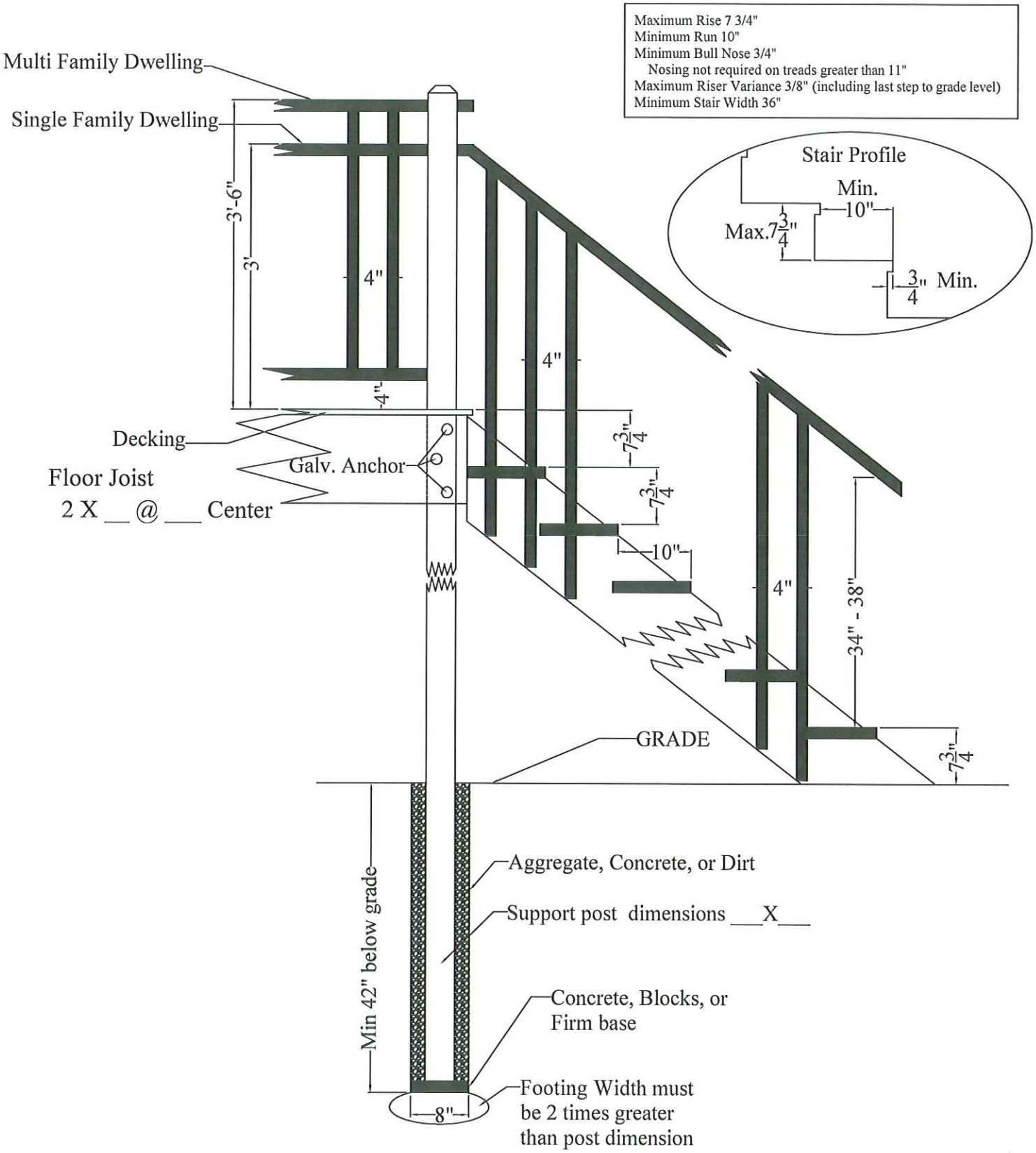

The Following Are Sections from the 2006 International Building Code & 2006 International Residential Code

Please Read These Sections Carefully As They Pertain To the Submission of Your Building Permit Application

Section 105.1 Required. Any owner or authorized agent who intends to construct, enlarge, alter, repair, move, demolish, or change the occupancy of a building or structure, or to erect, install, enlarge, alter, repair, remove, convert or replace any electrical, gas, mechanical or plumbing system, the installation of which is regulated by this code, or to cause any such work to be done, shall first make application to the building official and obtain the required permit.

Section 105.7 Placement of Permit. The building permit or copy shall be kept on the site of the work until the completion of the project.

Section 106.1 Submittal Documents. Construction documents, statement of special inspections and other data shall be submitted in one or more sets with each permit application. The construction documents shall be prepared by a registered design professional where required by the statutes of the jurisdiction in which the project is to be constructed. Where special conditions exist, the building official is authorized to require additional construction documents to be prepared by a registered design professional.

Section 106.1.1 Information on Construction Documents. Construction documents shall be dimensioned and drawn upon suitable material. Electronic media documents are permitted to be submitted when approved by the building official. Construction documents shall be of sufficient clarity to indicate the location, nature, and extent of the work proposed and show in detail that it will conform to the provisions of this code and relevant laws, ordinances, rules, and regulations, as determined by the building official.

Section 107.2.5 Site Plan. The construction documents submitted with the application for permit shall be accompanied by a site plan showing to scale the size and location of new construction and existing structures on the site, distances from lot lines, the established street grades and the proposed finished grades, and, as applicable, flood hazard areas, floodways, and design flood elevations; and it shall be drawn in accordance with an accurate boundary line survey. In the case of demolition, the site plan shall show construction to be demolished and the location and size of existing structures and construction that are to remain on the site or plot. The building official is authorized to waive or modify the requirement for a site plan when the application for permit is for alteration or repair or when otherwise warranted.

Section 107.4 Amended Construction Documents. Work shall be installed in accordance with the approved construction documents, and any changes made during construction that are not in compliance with the approved construction documents shall be resubmitted for approval as an amended set of construction documents.

Section 109.4 Work Commencing Before Permit Issuance. Any person who commences any work on a building, structure, electrical, gas, mechanical or plumbing system before obtaining the necessary permits shall be subject to a fee established by the building official that shall be in addition to the required permit fees.

Section 110.1 Inspections – General. Construction or work for which a permit is required shall be subject to inspection by the building official and such construction or work shall remain accessible and exposed for inspection purposes until approved. Approval as a result of an inspection shall not be construed to be an approval of a violation of the provisions of this code or of other ordinances of the jurisdiction. Inspections presuming to give authority to violate or cancel the provisions of this code or of other ordinances of the jurisdiction shall not be valid. It shall be the duty of the permit applicant to cause the work to remain accessible and exposed for inspection purposes. Neither the building official nor the jurisdiction shall be liable for expense entailed in the removal or replacement of any material required to allow inspection.

Section 110.3 Required Inspections: The building official, upon notification, shall make the inspections set forth in Section 109.3.1 through 109.3.10.

- ✓ **Section 109.3.1 Footing & Foundation Inspections:** Footing and foundation inspections shall be made after excavations for footings are complete and any required reinforcing steel is in place. For concrete foundations, any required forms shall be in place prior to inspection.
- ✓ **Section 109.3.2 Concrete Slab & Under-Floor Inspection:** Concrete slab and under-floor inspections shall be made after in-slab or under-floor reinforcing steel and building service equipment, conduit, piping accessories and other ancillary equipment items are in place, but before any concrete is placed or floor sheathing installed, including the sub-floor.
- ✓ **Section 109.3.4 Frame Inspection:** Framing inspections shall be made after the roof deck or sheathing, all framing, fire-blocking and bracing are in place and pipes, chimneys and vents to be concealed are complete and the rough electrical, plumbing, heating wires, pipes, and ducts are approved.
- ✓ **Section 109.3.6 Fire-Resistant Penetrations:** Protection of joints and penetrations in fire-resistance-rated assemblies shall not be concealed from view until inspected and approved.
- ✓ **Section 109.3.8 Other Inspections:** In addition to the inspections specified above, the building official is authorized to make or require other inspections of any construction work to ascertain compliance with the provisions of this code and other laws that are enforced by the department of building safety.
- ✓ **Section 109.3.10 Final Inspection:** The final inspection shall be made after all work required by the building permit is completed.

Section 109.5 Inspection Requests. It shall be the duty of the holder of the building permit or their duly authorized agent to notify the building official when work is ready for inspection. It shall be the duty of the permit holder to provide access to and means for inspections of such work that are required by this code.

Section 109.6 Approval Required. Work shall not be done beyond the point indicated in each successive inspection without first obtaining the approval of the building official. The building official, upon notification, shall make the requested inspections and shall either indicate the portion of the construction that is satisfactory as completed, or notify the permit holder or his or her agent wherein the same fails to comply with this code. Any portions that do not comply shall be corrected and such portion shall not be covered or concealed until authorized by the building official.

Section 110.1 Use & Occupancy. No building or structure shall be used or occupied, and no change in the existing occupancy classification of a building or structure or portion thereof shall be made until the building official has issued a certificated of occupancy therefore as provided herein. Issuance of a certificate of occupancy shall not be construed as an approval of a violation of the provisions of this code or other ordinances of the jurisdiction.

Section 110.4 Revocation. The building official is authorized to, in writing, suspend or revoke a certificate of occupancy or completion issued under the provisions of this code wherever the certificate is issued in error, or on the basis of incorrect information supplied, or where it is determined that the building or structure or portion thereof is in violation of any ordinance or regulation or any of the provisions of this code.

Section 114.1 Authority – Stop Work Order. Whenever the building official finds any work regulated by this code being performed in a manner either contrary to the provisions of this code or dangerous or unsafe, the building official is authorized to issue a stop work order.

Section R310.1 Emergency Escape and Rescue Required. Basements and every sleeping room shall have at least one operable emergency and rescue opening. Such opening shall open directly into a public street, public alley, yard or court. Where basements contain one or more sleeping rooms, emergency egress and rescue openings shall be required in each sleeping room, but shall not be required in adjoining areas of the basement. Where emergency escape and rescue openings are provided they shall have a sill height of not more than 44 inches (1118 mm) above the floor. Where a door opening having a threshold below the adjacent ground elevation serves as an emergency escape and rescue opening and is provided with a bulkhead enclosure, the bulkhead enclosure shall comply with Section R310.3. The net clear opening dimensions required by this section shall be obtained by the normal operation of the emergency escape and rescue opening from the inside. Emergency escape and rescue openings with a finished sill height below the adjacent ground elevation shall be provided with a window well in accordance with Section R310.2. Emergency escape and rescue openings shall open directly into a public way, or to a yard or court that opens to a public way.

> **Exception:** Basements used only to house mechanical equipment and not exceeding total floor area of 200 square feet.
>
> **R310.1.1 Minimum Opening Area** All emergency escape and rescue openings shall have a minimum net clear opening of 5.7 square feet.
>
> > **Exception:** Grade floor openings shall have a minimum net clear opening of 5 square feet.
>
> **R310.1.2 Minimum Opening Height** The minimum net clear opening height shall be 24 inches.
>
> **R310.1.3 Minimum Opening Width** The minimum net clear opening width shall be 20 inches.
>
> **R310.1.4 Operational Constraints** Emergency escape and rescue openings shall be operational from the inside of the room without the use of keys, tools, or special knowledge.

R310.2 Window Wells The minimum horizontal area of the window well shall be 9 square feet, with a minimum horizontal projection and width of 36 inches. The area of the window well shall allow the emergency escape and rescue opening to the fully opened.

> **Exception:** The ladder or steps required by Section R310.2.1 shall be permitted to encroach a maximum of 6 inches into the required dimensions of the window well.
>
> **R310.2.1 Ladder and Steps** Window wells with a vertical depth greater than 44 inches shall be equipped with a permanently affixed ladder or steps usable with the window in the fully open position. Ladders or steps required by this section shall not be required to comply with Sections R311.5 and R311.6. Ladders or rungs shall have an inside width of at least 12 inches, shall project at least 3 inches from the wall and shall be spaced not more than 18 inches on center vertically for the full height of the window well.

R310.1 Bulkhead Enclosures Bulkhead enclosures shall provide direct access to the basement. The bulkhead enclosures with the door panels in the fully open position shall provide the minimum net clear opening required by Section R310.1.1. Bulkhead enclosures shall also comply with Section R311.5.8.2.

R310.4 Bars, Grilles, Covers and Screens Bars, grilles, covers, screens or similar devices are permitted to be placed over emergency escape and rescue openings, bulkhead enclosures, or window wells that serve such openings, provided the minimum net clear opening size complies with Section R310.1.1 to R310.1.3, and such devices shall be releasable or removable from the inside without the use of a key, took, special knowledge or force greater than that which is required for normal operation of the escape and rescue opening.

R310.5 Emergency Escape Windows Under Decks and Porches Emergency escape windows are allowed to be installed under decks and porches provided the location of the deck allows the emergency escape window to be fully opened and provides a path not less than 36 inches in height to a yard or court.

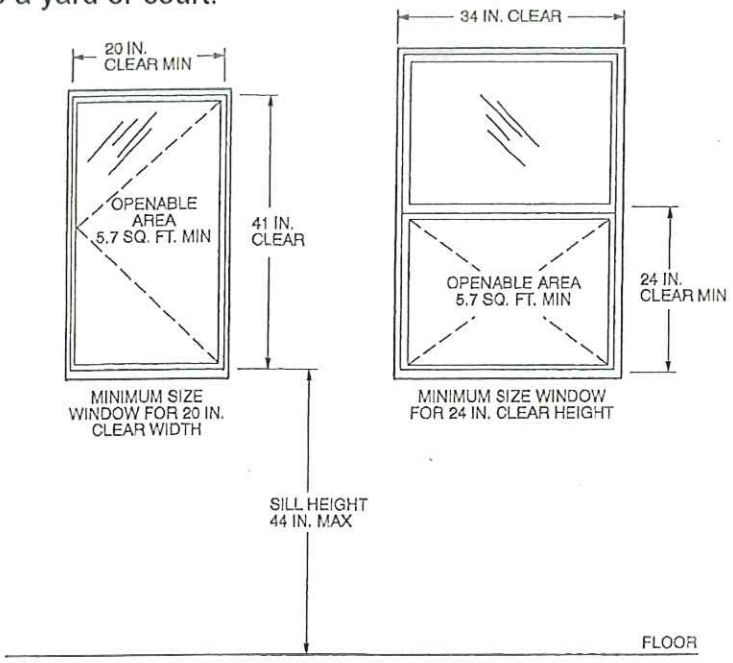

For SI: 1 inch = 25.4 mm, 1 square foot = 0.0929 m^2.

Figure R310.1

Emergency Escape and Rescue Windows

Section R405.1 Concrete or Masonry Foundations – Foundation Drainage. Drains shall be provided around all concrete or masonry foundations that retain earth and enclose habitable or usable spaces located below grade. Drainage tiles, gravel or crushed stone drains, perforated pipe or other approved systems or materials shall be installed at or below the area to be protected and shall discharge by gravity or mechanical means into an approved drainage system. Gravel or crushed stone drains shall extend at least 1 foot (305 mm) beyond the outside edge of the footing and 6 inches (153 mm) above the top of the footing and be covered with an approved filter membrane material. The top of open joints of drain tiles shall be protected with strips of building paper, and the drainage tiles or perforated pipe shall be placed on a minimum of 2 inches (51 mm) of washed gravel or crushed rock at least one sieve size larger than the tile joint opening or perforation and covered with not less than 6 inches (153 mm) of the same material.

> **Exception:** A drainage system is not required when the foundation is installed on well-drained ground or sand-gravel mixture soils according to the Unified Soil Classification System, Group I Soils, as detailed in Table R405.1.

Section R405.2 Wood Foundations. Wood foundations enclosing habitable or usable spaces located below grade shall be adequately drained in accordance with Sections R405.2.1 through R405.2.3.

R405.2.1 Base. A porous layer of gravel, crushed stone or coarse sand shall be placed to a minimum thickness of 4 inches (102 mm) under the basement floor. Provision shall be made for automatic draining of this layer and the gravel or crushed stone wall footings.

R405.2.2 Moisture Barrier. A 6-mil-thick (0.15 mm) polyethylene moisture barrier shall be applied over the porous layer with the basement floor constructed over the polyethylene.

R405.2.3 Drainage System. In other than Group I soils, a sump shall be provided to drain the porous layer and footings. The sump shall be at least 24 inches (610 mm) in diameter or 20 inches square ($0.129m^2$), shall extend at least 24 inches (610 mm) below the bottom of the basement floor and shall be capable of positive gravity or mechanical drainage to remove any accumulated water. The drainage system shall discharge into an approved sewer system or to daylight.

repeated brushing, dipping or soaking until the wood absorbs no more preservative.

R402.2 Concrete. Concrete shall have a minimum specified compressive strength of f'_c, as shown in Table R402.2. Concrete subject to moderate or severe weathering as indicated in Table R301.2(1) shall be air entrained as specified in Table R402.2. The maximum weight of fly ash, other pozzolans, silica fume, slag or blended cements that is included in concrete mixtures for garage floor slabs and for exterior porches, carport slabs and steps that will be exposed to deicing chemicals shall not exceed the percentages of the total weight of cementitious materials specified in Section 4.2.3 of ACI 318. Materials used to produce concrete and testing thereof shall comply with the applicable standards listed in Chapter 3 of ACI 318.

R402.3 Precast concrete. Approved precast concrete foundations shall be designed and installed in accordance with the provisions of this code and the manufacturer's installation instructions.

SECTION R403 FOOTINGS

R403.1 General. All exterior walls shall be supported on continuous solid or fully grouted masonry or concrete footings, wood foundations, or other approved structural systems which shall be of sufficient design to accommodate all loads according to Section R301 and to transmit the resulting loads to the soil within the limitations as determined from the character of the soil. Footings shall be supported on undisturbed natural soils or engineered fill.

TABLE R403.1
MINIMUM WIDTH OF CONCRETE OR MASONRY FOOTINGS (Inches)[a]

	LOAD-BEARING VALUE OF SOIL (psf)			
	1,500	2,000	3,000	≥4,000
Conventional light-frame construction				
1-story	12	12	12	12
2-story	15	12	12	12
3-story	23	17	12	12
4-inch brick veneer over light frame or 8-inch hollow concrete masonry				
1-story	12	12	12	12
2-story	21	16	12	12
3-story	32	24	16	12
8-inch solid or fully grouted masonry				
1-story	16	12	12	12
2-story	29	21	14	12
3-story	42	32	21	16

For SI: 1 inch = 25.4 mm, 1 pound per square foot = 0.0479 kPa.

a. Where minimum footing width is 12 inches, use of a single wythe of solid or fully grouted 12-inch nominal concrete masonry units is permitted.

R403.1.1 Minimum size. Minimum sizes for concrete and masonry footings shall be as set forth in Table R403.1 and Figure R403.1(1). The footing width, W, shall be based on the load-bearing value of the soil in accordance with Table R401.4.1. Spread footings shall be at least 6 inches (152 mm) thick. Footing projections, *P*, shall be at least 2 inches

TABLE R402.2
MINIMUM SPECIFIED COMPRESSIVE STRENGTH OF CONCRETE

TYPE OR LOCATION OF CONCRETE CONSTRUCTION	MINIMUM SPECIFIED COMPRESSIVE STRENGTH[a] (f'_c)		
	Weathering Potential[b]		
	Negligible	Moderate	Severe
Basement walls, foundations and other concrete not exposed to the weather	2,500	2,500	2,500[c]
Basement slabs and interior slabs on grade, except garage floor slabs	2,500	2,500	2,500[c]
Basement walls, foundation walls, exterior walls and other vertical concrete work exposed to the weather	2,500	3,000[d]	3,000[d]
Porches, carport slabs and steps exposed to the weather, and garage floor slabs	2,500	3,000[d,e,f]	3,500[d,e,f]

For SI: 1 pound per square inch = 6.895 kPa.

a. Strength at 28 days psi.

b. See Table R301.2(1) for weathering potential.

c. Concrete in these locations that may be subject to freezing and thawing during construction shall be air-entrained concrete in accordance with Footnote d.

d. Concrete shall be air-entrained. Total air content (percent by volume of concrete) shall be not less than 5 percent or more than 7 percent.

e. See Section R402.2 for maximum cementitious materials content.

f. For garage floors with a steel troweled finish, reduction of the total air content (percent by volume of concrete) to not less than 3 percent is permitted if the specified compressive strength of the concrete is increased to not less than 4,000 psi.

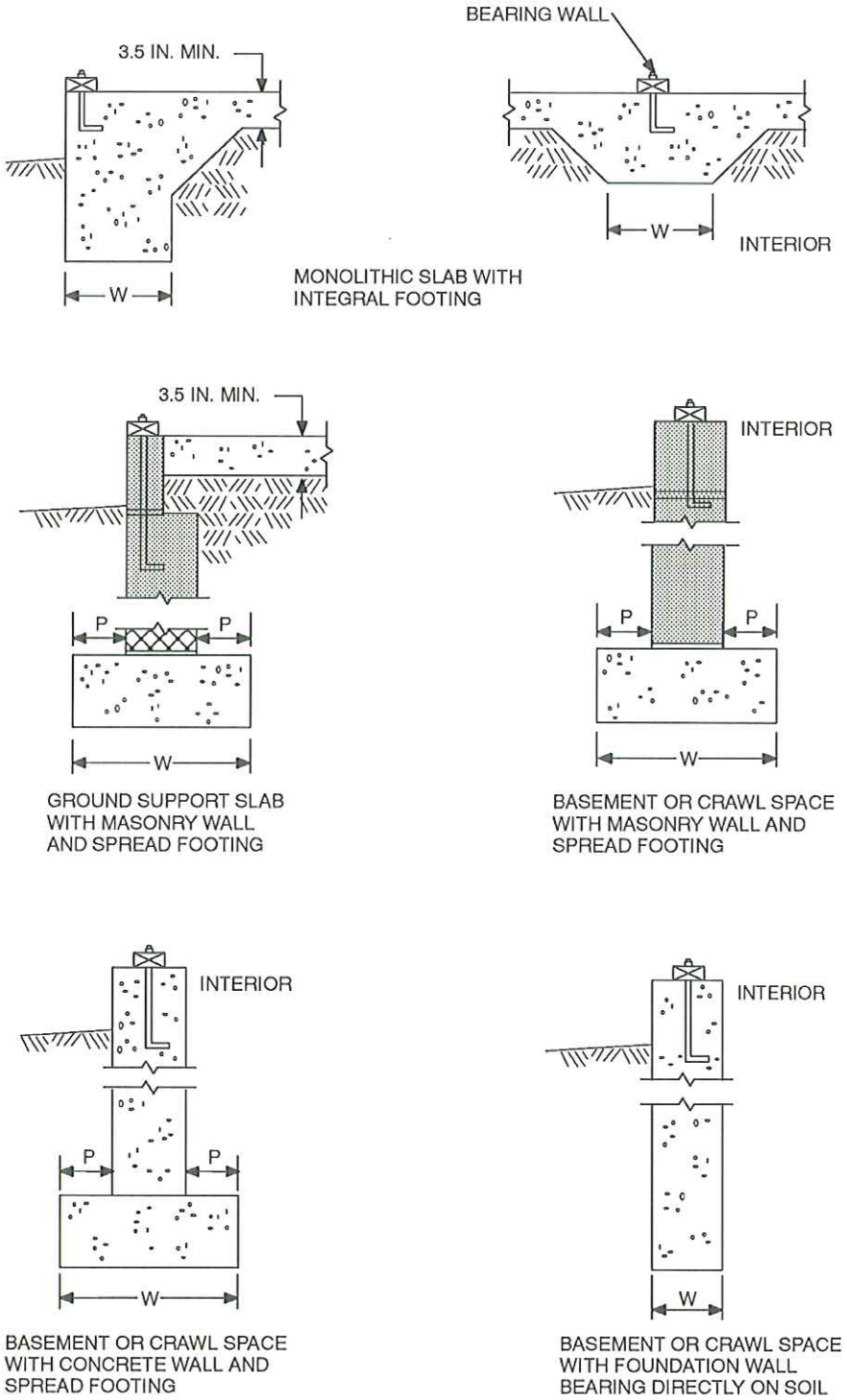

For SI: 1 inch = 25.4 mm.

FIGURE R403.1(1)
CONCRETE AND MASONRY FOUNDATION DETAILS

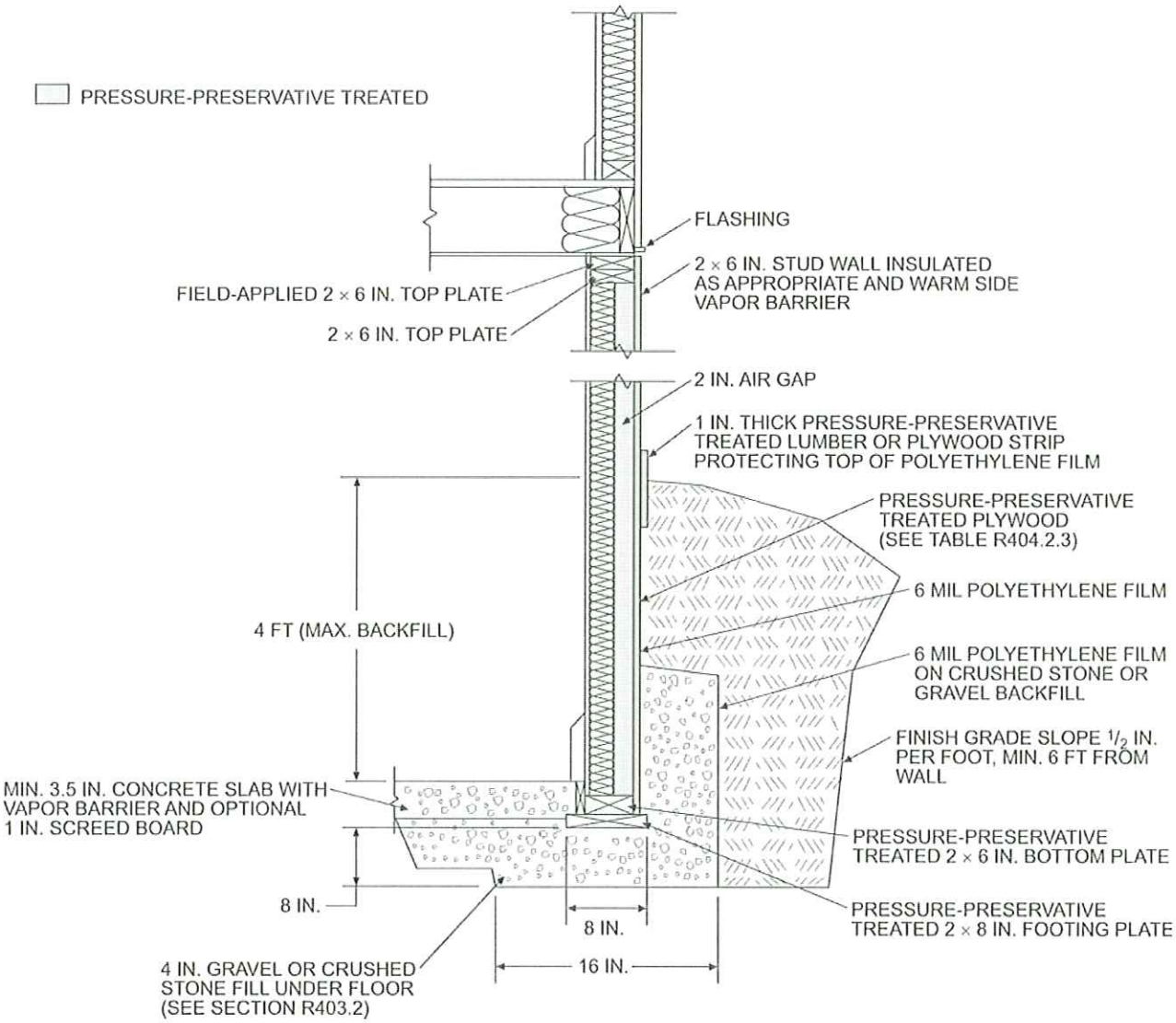

For SI: 1 inch 25.4 = mm, 1 foot =304.8, 1 mil =0.0254 mm.

FIGURE R403.1(2)
PERMANENT WOOD FOUNDATION BASEMENT WALL SECTION

(51 mm) and shall not exceed the thickness of the footing. The size of footings supporting piers and columns shall be based on the tributary load and allowable soil pressure in accordance with Table R401.4.1. Footings for wood foundations shall be in accordance with the details set forth in Section R403.2, and Figures R403.1(2) and R403.1(3).

R403.1.2 Continuous footing in Seismic Design Categories D_0, D_1 and D_2. The braced wall panels at exterior walls of buildings located in Seismic Design Categories D_0, D_1 and D_2 shall be supported by continuous footings. All required interior braced wall panels in buildings with plan dimensions greater than 50 feet (15 240 mm) shall also be supported by continuous footings.

R403.1.3 Seismic reinforcing. Concrete footings located in Seismic Design Categories D_0, D_1 and D_2, as established in Table R301.2(1), shall have minimum reinforcement. Bottom reinforcement shall be located a minimum of 3 inches (76 mm) clear from the bottom of the footing.

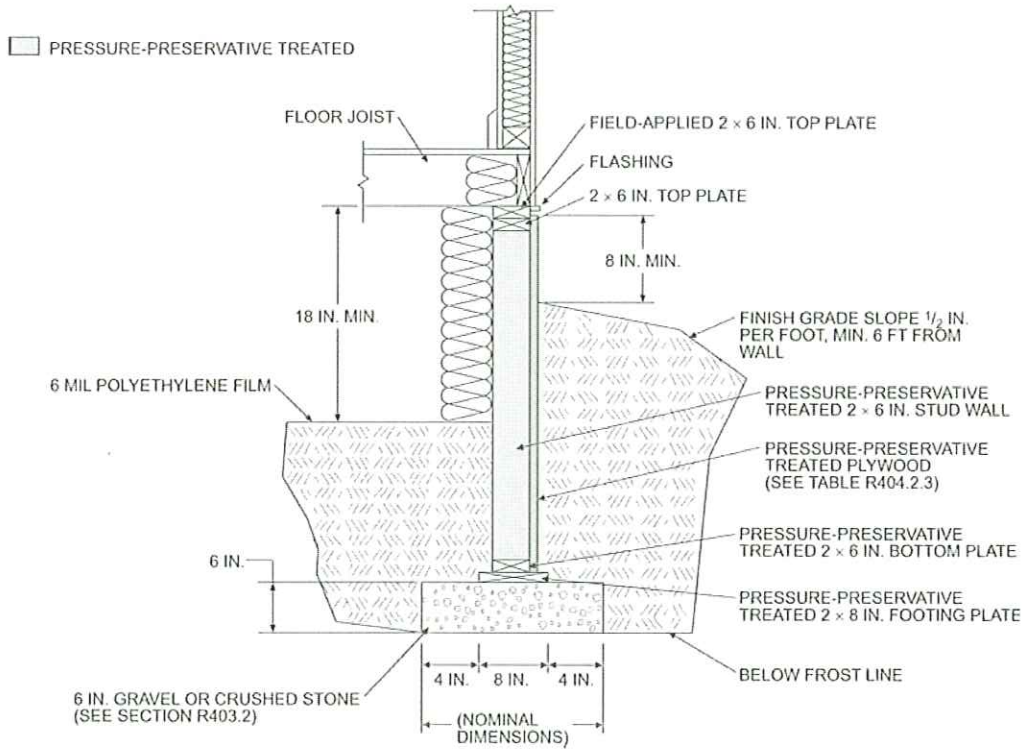

For SI: 1 inch = 25.4 mm, 1 foot = 304.8 mm, 1 mil = 0.0254 mm.

FIGURE R403.1(3)
PERMANENT WOOD FOUNDATION CRAWL SPACE SECTION

In Seismic Design Categories D_0, D_1 and D_2 where a construction joint is created between a concrete footing and a stem wall, a minimum of one No. 4 bar shall be installed at not more than 4 feet (1219 mm) on center. The vertical bar shall extend to 3 inches (76 mm) clear of the bottom of the footing, have a standard hook and extend a minimum of 14 inches (357 mm) into the stem wall.

In Seismic Design Categories D_0, D_1 and D_2 where a grouted masonry stem wall is supported on a concrete footing and stem wall, a minimum of one No. 4 bar shall be installed at not more than 4 feet on center. The vertical bar shall extend to 3 inches (76 mm) clear of the bottom of the footing and have a standard hook.

In Seismic Design Categories D_0, D_1 and D_2 masonry stem walls without solid grout and vertical reinforcing are not permitted.

Exception: In detached one- and two-family dwellings which are three stories or less in height and constructed with stud bearing walls, plain concrete footings without longitudinal reinforcement supporting walls and isolated plain concrete footings supporting columns or pedestals are permitted.

R403.1.3.1 Foundations with stemwalls. Foundations with stem walls shall have installed a minimum of one No. 4 bar within 12 inches (305 mm) of the top of the wall and one No. 4 bar located 3 inches (76 mm) to 4 inches (102 mm) from the bottom of the footing.

R403.1.3.2 Slabs-on-ground with turned-down footings. Slabs-on-ground with turned-down footings shall have a minimum of one No. 4 bar at the top and bottom of the footing.

Exception: For slabs-on-ground cast monolithically with a footing, one No. 5 bar or two No. 4 bars shall be located in the middle third of the footing depth.

R403.1.4 Minimum depth. All exterior footings shall be placed at least 12 inches (305 mm) below the undisturbed ground surface. Where applicable, the depth of footings shall also conform to Sections R403.1.4.1 through R403.1.4.2.

R403.1.4.1 Frost protection. Except where otherwise protected from frost, foundation walls, piers and other permanent supports of buildings and structures shall be protected from frost by one or more of the following methods:

1. Extended below the frost line specified in Table R301.2.(1);
2. Constructing in accordance with Section R403.3;
3. Constructing in accordance with ASCE 32; or
4. Erected on solid rock.

Exceptions:

1. Protection of freestanding accessory structures with an area of 600 square feet (56 m^2) or less, of light-framed construction, with an eave height of 10 feet (3048 mm) or less shall not be required.
2. Protection of freestanding accessory structures with an area of 400 square feet (37 m^2) or less, of other than light-framed construction, with an eave height of 10 feet (3048 mm) or less shall not be required.
3. Decks not supported by a dwelling need not be provided with footings that extend below the frost line.

Footings shall not bear on frozen soil unless the frozen condition is permanent.

R403.1.4.2 Seismic conditions. In Seismic Design Categories D_0, D_1 and D_2, interior footings supporting bearing or bracing walls and cast monolithically with a slab on grade shall extend to a depth of not less than 12 inches (305 mm) below the top of the slab.

R403.1.5 Slope. The top surface of footings shall be level. The bottom surface of footings shall not have a slope exceeding one unit vertical in 10 units horizontal (10-percent slope). Footings shall be stepped where it is necessary to change the elevation of the top surface of the footings or where the slope of the bottom surface of the footings will exceed one unit vertical in ten units horizontal (10-percent slope).

R403.1.6 Foundation anchorage. When braced wall panels are supported directly on continuous foundations, the wall wood sill plate or cold-formed steel bottom track shall be anchored to the foundation in accordance with this section.

The wood sole plate at exterior walls on monolithic slabs and wood sill plate shall be anchored to the foundation with anchor bolts spaced a maximum of 6 feet (1829 mm) on center. There shall be a minimum of two bolts per plate section with one bolt located not more than 12 inches (305 mm) or less than seven bolt diameters from each end of the plate section. In Seismic Design Categories D_0, D_1 and D_2, anchor bolts shall be spaced at 6 feet (1829 mm) on center and located within 12 inches (305 mm) of the ends of each plate section at interior braced wall lines when required by Section R602.10.9 to be supported on a continuous foundation. Bolts shall be at least $^1/_2$ inch (13 mm) in diameter and shall extend a minimum of 7 inches (178 mm) into masonry or concrete. Interior bearing wall sole plates on monolithic slab foundation shall be positively anchored with approved fasteners. A nut and washer shall be tightened on each bolt of the plate. Sills and sole plates shall be protected against decay and termites where required by Sections R319 and R320. Cold-formed steel framing systems shall be fastened to the wood sill plates or anchored directly to the foundation as required in Section R505.3.1 or R603.1.1.

Exceptions:

1. Foundation anchorage, spaced as required to provide equivalent anchorage to $^1/_2$-inch-diameter (13 mm) anchor bolts.
2. Walls 24 inches (610 mm) total length or shorter connecting offset braced wall panels shall be anchored to the foundation with a minimum of one anchor bolt located in the center third of the plate section and shall be attached to adjacent braced wall panels per Figure R602.10.5 at corners.
3. Walls 12 inches (305 mm) total length or shorter connecting offset braced wall panels shall be permitted to be connected to the foundation without anchor bolts. The wall shall be attached to adjacent braced wall panels per Figure R602.10.5 at corners.

R403.1.6.1 Foundation anchorage in Seismic Design Categories C, D_0, D_1 and D_2. In addition to the requirements of Section R403.1.6, the following requirements shall apply to wood light-frame structures in Seismic Design Categories D_0, D_1 and D_2 and wood light-frame townhouses in Seismic Design Category C.

1. Plate washers conforming to Section R602.11.1 shall be provided for all anchor bolts over the full length of required braced wall lines. Properly sized cut washers shall be permitted for anchor bolts in wall lines not containing braced wall panels.
2. Interior braced wall plates shall have anchor bolts spaced at not more than 6 feet (1829 mm) on center and located within 12 inches (305 mm) of the ends of each plate section when supported on a continuous foundation.
3. Interior bearing wall sole plates shall have anchor bolts spaced at not more than 6 feet (1829 mm) on center and located within 12 inches (305 mm) of the ends of each plate section when supported on a continuous foundation.
4. The maximum anchor bolt spacing shall be 4 feet (1219 mm) for buildings over two stories in height.
5. Stepped cripple walls shall conform to Section R602.11.3.
6. Where continuous wood foundations in accordance with Section R404.2 are used, the force transfer shall have a capacity equal to or greater than the connections required by Section R602.11.1 or the braced wall panel shall be connected to the wood foundations in accordance with the braced wall panel-to-floor fastening requirements of Table R602.3(1).

R403.1.7 Footings on or adjacent to slopes. The placement of buildings and structures on or adjacent to slopes steeper than 1 unit vertical in 3 units horizontal (33.3-percent slope) shall conform to Sections R403.1.7.1 through R403.1.7.4.

R403.1.7.1 Building clearances from ascending slopes. In general, buildings below slopes shall be set a

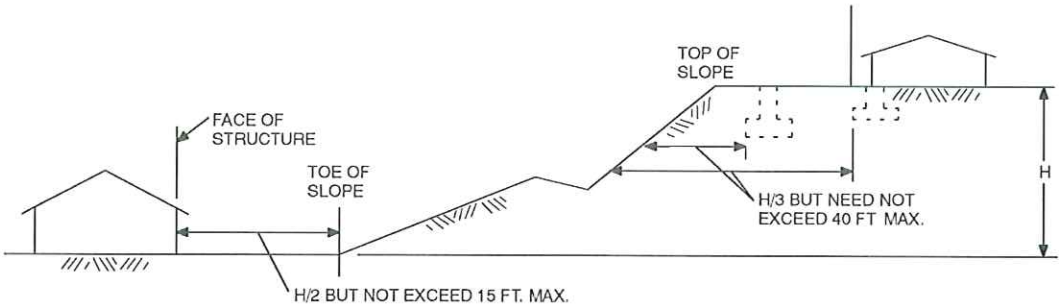

For SI: 1 foot = 304.8 mm.

FIGURE R403.1.7.1
FOUNDATION CLEARANCE FROM SLOPES

sufficient distance from the slope to provide protection from slope drainage, erosion and shallow failures. Except as provided in Section R403.1.7.4 and Figure R403.1.7.1, the following criteria will be assumed to provide this protection. Where the existing slope is steeper than one unit vertical in one unit horizontal (100-percent slope), the toe of the slope shall be assumed to be at the intersection of a horizontal plane drawn from the top of the foundation and a plane drawn tangent to the slope at an angle of 45 degrees (0.79 rad) to the horizontal. Where a retaining wall is constructed at the toe of the slope, the height of the slope shall be measured from the top of the wall to the top of the slope.

R403.1.7.2 Footing setback from descending slope surfaces. Footings on or adjacent to slope surfaces shall be founded in material with an embedment and setback from the slope surface sufficient to provide vertical and lateral support for the footing without detrimental settlement. Except as provided for in Section R403.1.7.4 and Figure R403.1.7.1, the following setback is deemed adequate to meet the criteria. Where the slope is steeper than one unit vertical in one unit horizontal (100-percent slope), the required setback shall be measured from an imaginary plane 45 degrees (0.79 rad) to the horizontal, projected upward from the toe of the slope.

R403.1.7.3 Foundation elevation. On graded sites, the top of any exterior foundation shall extend above the elevation of the street gutter at point of discharge or the inlet of an approved drainage device a minimum of 12 inches (305 mm) plus 2 percent. Alternate elevations are permitted subject to the approval of the building official, provided it can be demonstrated that required drainage to the point of discharge and away from the structure is provided at all locations on the site.

R403.1.7.4 Alternate setback and clearances. Alternate setbacks and clearances are permitted, subject to the approval of the building official. The building official is permitted to require an investigation and recommendation of a qualified engineer to demonstrate that the intent of this section has been satisfied. Such an investigation shall include consideration of material, height of slope, slope gradient, load intensity and erosion characteristics of slope material.

R403.1.8 Foundations on expansive soils. Foundation and floor slabs for buildings located on expansive soils shall be designed in accordance with Section 1805.8 of the *International Building Code*.

Exception: Slab-on-ground and other foundation systems which have performed adequately in soil conditions similar to those encountered at the building site are permitted subject to the approval of the building official.

R403.1.8.1 Expansive soils classifications. Soils meeting all four of the following provisions shall be considered expansive, except that tests to show compliance with Items 1, 2 and 3 shall not be required if the test prescribed in Item 4 is conducted:

1. Plasticity Index (PI) of 15 or greater, determined in accordance with ASTM D 4318.
2. More than 10 percent of the soil particles pass a No. 200 sieve (75 mm), determined in accordance with ASTM D 422.
3. More than 10 percent of the soil particles are less than 5 micrometers in size, determined in accordance with ASTM D 422.
4. Expansion Index greater than 20, determined in accordance with ASTM D 4829.

R403.2 Footings for wood foundations. Footings for wood foundations shall be in accordance with Figures R403.1(2) and R403.1(3). Gravel shall be washed and well graded. The maximum size stone shall not exceed $^3/_4$ inch (19.1 mm). Gravel shall be free from organic, clayey or silty soils. Sand shall be coarse, not smaller than $^1/_{16}$-inch (1.6 mm) grains and shall be free from organic, clayey or silty soils. Crushed stone shall have a maximum size of $^1/_2$ inch (12.7 mm).

R403.3 Frost protected shallow foundations. For buildings where the monthly mean temperature of the building is maintained at a minimum of 64°F (18°C), footings are not required to extend below the frost line when protected from frost by insulation in accordance with Figure R403.3(1) and Table R403.3. Foundations protected from frost in accordance with Figure R403.3(1) and Table R403.3 shall not be used for unheated spaces such as porches, utility rooms, garages and carports, and shall not be attached to basements or crawl spaces

TABLE R403.3
MINIMUM INSULATION REQUIREMENTS FOR FROST-PROTECTED FOOTINGS IN HEATED BUILDINGS[a]

AIR FREEZING INDEX (°F-days)[b]	VERTICAL INSULATION *R*-VALUE[c,d]	HORIZONTAL INSULATION *R*-VALUE[c,e]		HORIZONTAL INSULATION DIMENSIONS PER FIGURE R403.3(1) (inches)		
		Along walls	At corners	A	B	C
1,500 or less	4.5	Not required	Not required	Not required	Not required	Not required
2,000	5.6	Not required	Not required	Not required	Not required	Not required
2,500	6.7	1.7	4.9	12	24	40
3,000	7.8	6.5	8.6	12	24	40
3,500	9.0	8.0	11.2	24	30	60
4,000	10.1	10.5	13.1	24	36	60

a. Insulation requirements are for protection against frost damage in heated buildings. Greater values may be required to meet energy conservation standards. Interpolation between values is permissible.
b. See Figure R403.3(2) for Air Freezing Index values.
c. Insulation materials shall provide the stated minimum *R*–values under long-term exposure to moist, below-ground conditions in freezing climates. The following *R*–values shall be used to determine insulation thicknesses required for this application: Type II expanded polystyrene—2.4*R* per inch; Type IV extruded polystyrene—4.5*R* per inch; Type VI extruded polystyrene—4.5*R* per inch; Type IX expanded polystyrene—3.2*R* per inch; Type X extruded polystyrene—4.5*R* per inch.
d. Vertical insulation shall be expanded polystyrene insulation or extruded polystyrene insulation.
e. Horizontal insulation shall be extruded polystyrene insulation.

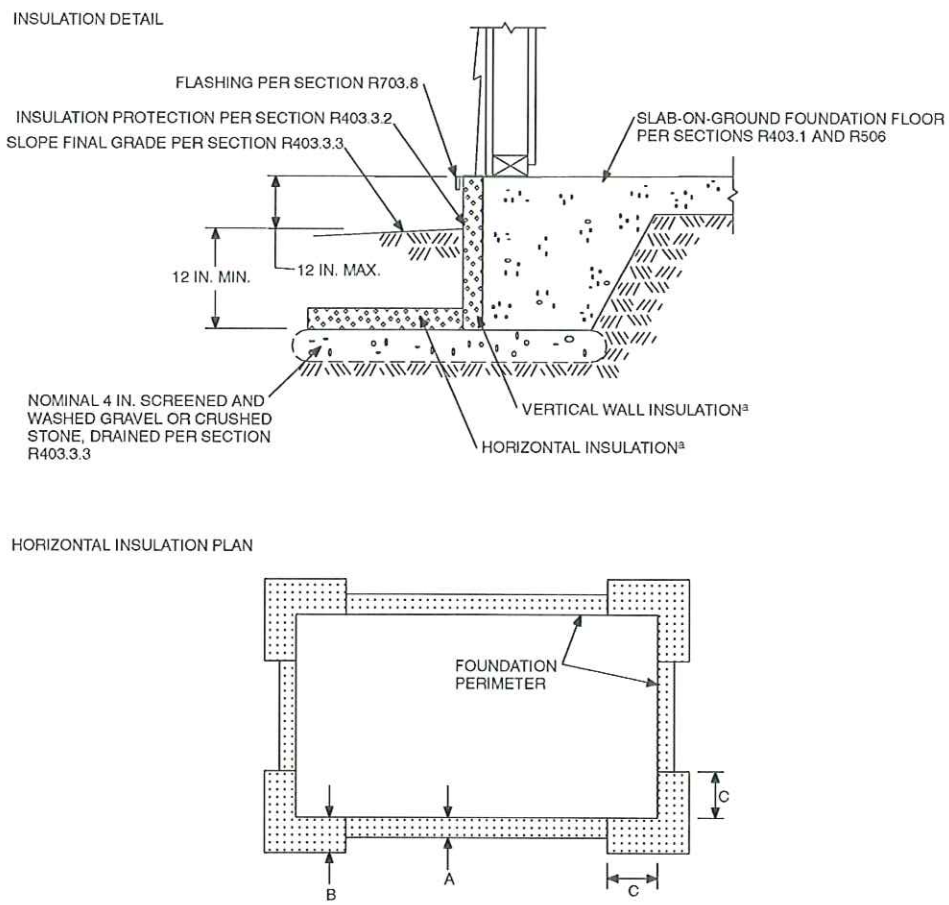

For SI: 1 inch = 25.4 mm.
a. See Table R403.3 for required dimensions and R-values for vertical and horizontal insulation.

FIGURE R403.3(1)
INSULATION PLACEMENT FOR FROST-PROTECTED FOOTINGS IN HEATED BUILDINGS

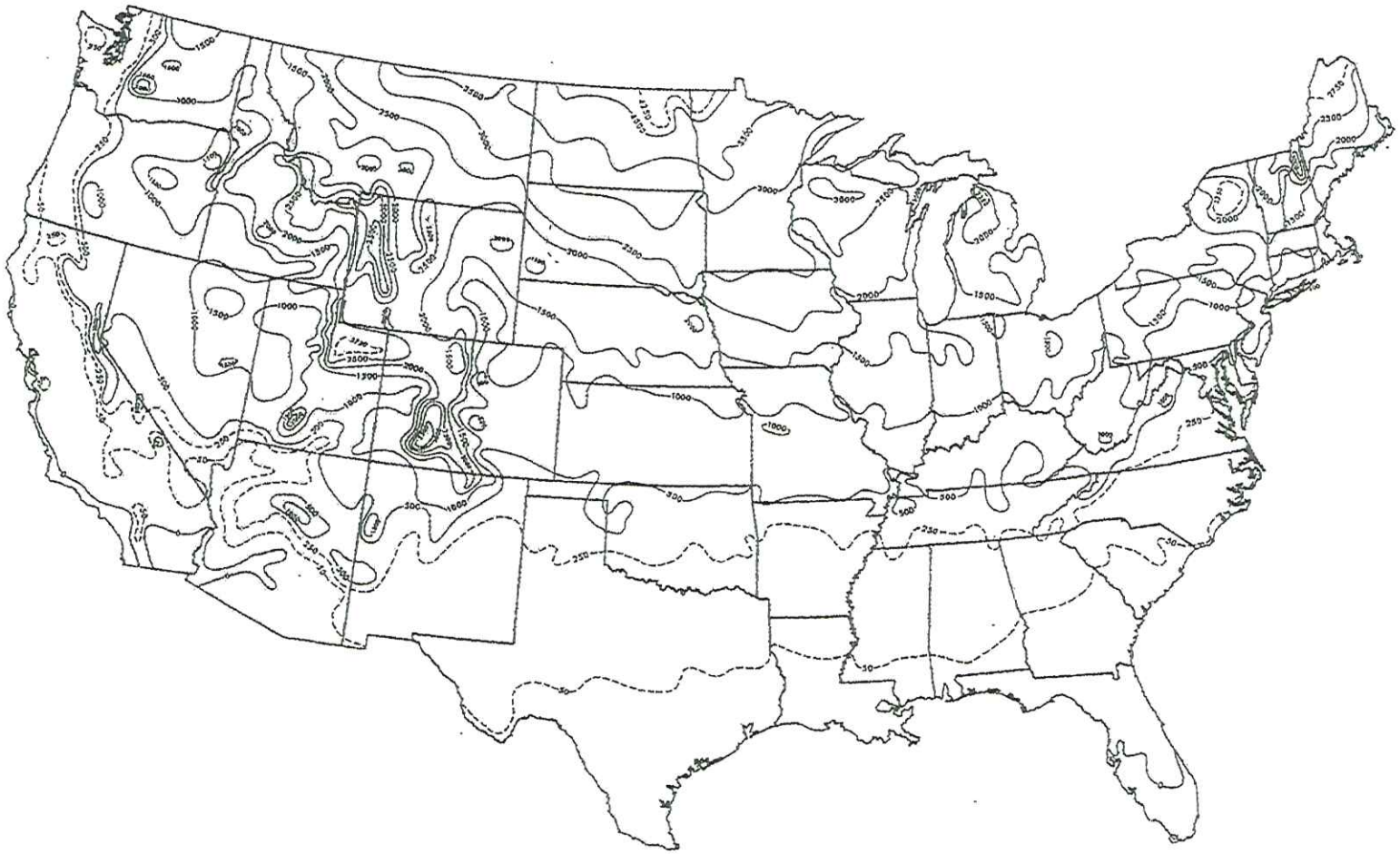

For SI: °C = [(°F)-32]/1.8.

NOTE: The air-freezing index is defined as cumulative degree days below 32°F. It is used as a measure of the combined magnitude and duration of air temperature below freezing. The index was computed over a 12-month period (July-June) for each of the 3,044 stations used in the above analysis. Data from the 1951-80 period were fitted to a Weibull probability distribution to produce an estimate of the 100-year return period.

FIGURE R403.3(2)
AIR–FREEZING INDEX
AN ESTIMATE OF THE 100-YEAR RETURN PERIOD

INSULATION DETAIL

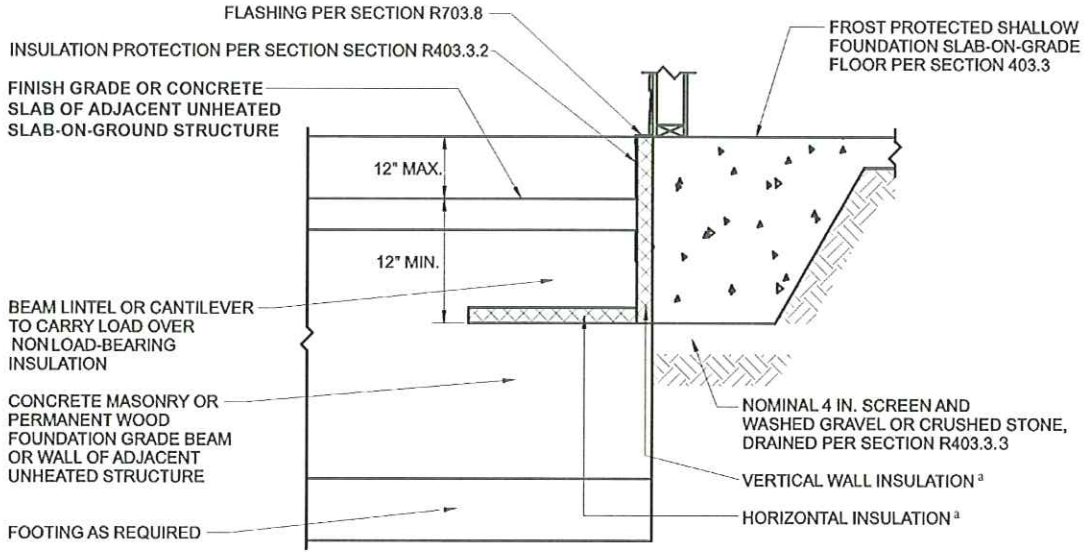

HORIZONTAL INSULATION PLAN

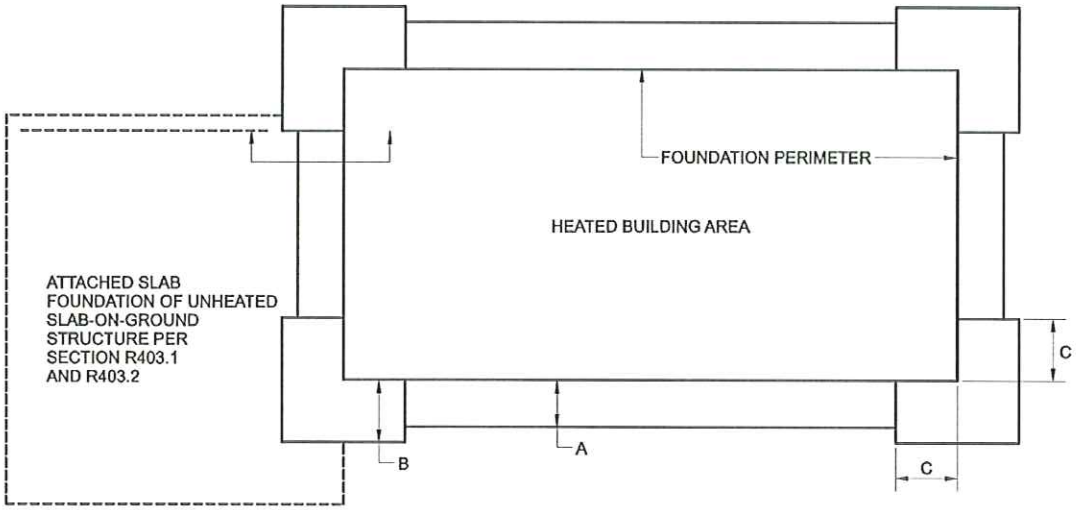

For SI: 1 inch = 25.4 mm.

a. See Table R403.3 for required dimensions and *R*-values for vertical and horizontal insulation.

FIGURE R403.3(3)
INSULATION PLACEMENT FOR FROST-PROTECTED FOOTINGS ADJACENT TO UNHEATED SLAB-ON-GROUND STRUCTURE

that are not maintained at a minimum monthly mean temperature of 64°F (18°C).

Materials used below grade for the purpose of insulating footings against frost shall be labeled as complying with ASTM C 578.

R403.3.1 Foundations adjoining frost protected shallow foundations. Foundations that adjoin frost protected shallow foundations shall be protected from frost in accordance with Section R403.1.4.

R403.3.1.1 Attachment to unheated slab-on-ground structure. Vertical wall insulation and horizontal insulation of frost protected shallow foundations that adjoin a slab-on-ground foundation that does not have a monthly mean temperature maintained at a minimum of 64°F (18°C), shall be in accordance with Figure R403.3(3) and Table R403.3. Vertical wall insulation shall extend between the frost protected shallow foundation and the adjoining slab foundation. Required horizontal insulation shall be continuous under the adjoining slab foundation and through any foundation walls adjoining the frost protected shallow foundation. Where insulation passes through a foundation wall, it shall either be of a type complying with this section and having bearing capacity equal to or greater than the structural loads imposed by the building, or the building shall be designed and constructed using beams, lintels, cantilevers or other means of transferring building loads such that the structural loads of the building do not bear on the insulation.

R403.3.1.2 Attachment to heated structure. Where a frost protected shallow foundation abuts a structure that has a monthly mean temperature maintained at a minimum of 64°F (18°C), horizontal insulation and vertical wall insulation shall not be required between the frost protected shallow foundation and the adjoining structure. Where the frost protected shallow foundation abuts the heated structure, the horizontal insulation and vertical wall insulation shall extend along the adjoining foundation in accordance with Figure R403.3(4) a distance of not less than Dimension A in Table R403.3.

Exception: Where the frost protected shallow foundation abuts the heated structure to form an inside corner, vertical insulation extending along the adjoining foundation is not required.

R403.3.2 Protection of horizontal insulation below ground. Horizontal insulation placed less than 12 inches (305 mm) below the ground surface or that portion of horizontal insulation extending outward more than 24 inches (610 mm) from the foundation edge shall be protected against damage by use of a concrete slab or asphalt paving on the ground surface directly above the insulation or by cementitious board, plywood rated for below-ground use, or other approved materials placed below ground, directly above the top surface of the insulation.

R403.3.3 Drainage. Final grade shall be sloped in accordance with Section R401.3. In other than Group I Soils, as detailed in Table R405.1, gravel or crushed stone beneath horizontal insulation below ground shall drain to daylight or into an approved sewer system.

R403.3.4 Termite damage. The use of foam plastic in areas of "very heavy" termite infestation probability shall be in accordance with Section R320.5.

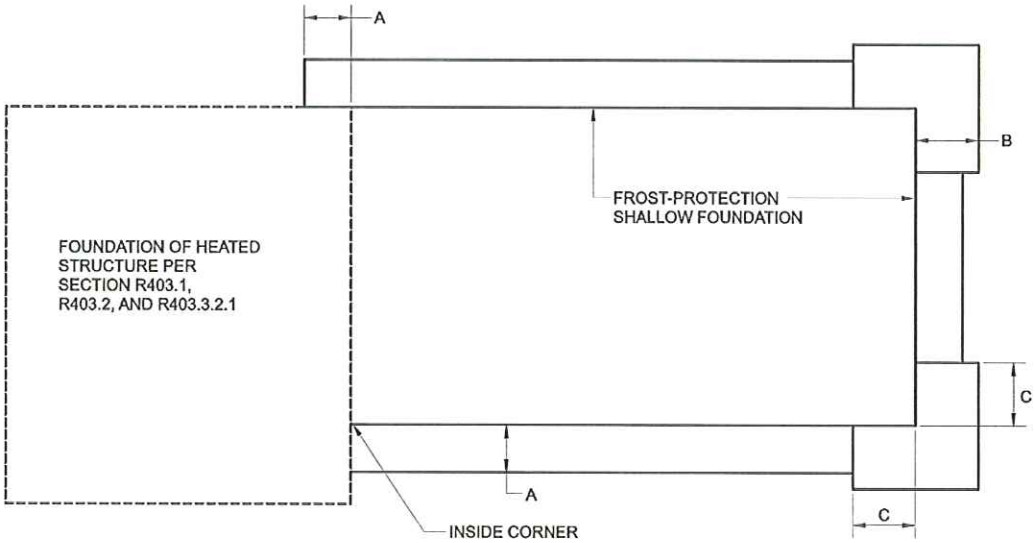

FIGURE R403.3(4)
INSULATION PLACEMENT FOR FROST-PROTECTED FOOTINGS ADJACENT TO HEATED STRUCTURE

TABLE R404.2.3
PLYWOOD GRADE AND THICKNESS FOR WOOD FOUNDATION CONSTRUCTION
(30 pcf equivalent-fluid weight soil pressure)

HEIGHT OF FILL (inches)	STUD SPACING (inches)	FACE GRAIN ACROSS STUDS			FACE GRAIN PARALLEL TO STUDS		
		Grade[a]	Minimum thickness (inches)	Span rating	Grade[a]	Minimum thickness (inches)[b,c]	Span rating
24	12	B	$^{15}/_{32}$	32/16	A	$^{15}/_{32}$	32/16
					B	$^{15}/_{32}$[c]	32/16
	16	B	$^{15}/_{32}$	32/16	A	$^{15}/_{32}$[c]	32/16
					B	$^{19}/_{32}$[c] (4, 5 ply)	40/20
36	12	B	$^{15}/_{32}$	32/16	A	$^{15}/_{32}$	32/16
					B	$^{15}/_{32}$[c] (4, 5 ply)	32/16
					B	$^{19}/_{32}$ (4, 5 ply)	40/20
	16	B	$^{15}/_{32}$[c]	32/16	A	$^{19}/_{32}$	40/20
					B	$^{23}/_{32}$	48/24
48	12	B	$^{15}/_{32}$	32/16	A	$^{15}/_{32}$[c]	32/16
					B	$^{19}/_{32}$[c] (4, 5 ply)	40/20
	16	B	$^{19}/_{32}$	40/20	A	$^{19}/_{32}$[c]	40/20
					A	$^{23}/_{32}$	48/24

For SI: 1 inch = 25.4 mm, 1 foot = 304.8 mm, 1 pound per cubic foot = 0.1572 kN/m^3.

a. Plywood shall be of the following minimum grades in accordance with DOC PS 1 or DOC PS 2:

1. DOC PS 1 Plywood grades marked:
   - 1.1. Structural I C-D (Exposure 1)
   - 1.2. C-D (Exposure 1)
2. DOC PS 2 Plywood grades marked:
   - 2.1. Structural I Sheathing (Exposure 1)
   - 2.2. Sheathing (Exposure 1)
3. Where a major portion of the wall is exposed above ground and a better appearance is desired, the following plywood grades marked exterior are suitable:
   - 3.1. Structural I A-C, Structural I B-C or Structural I C-C (Plugged) in accordance with DOC PS 1
   - 3.2. A-C Group 1, B-C Group 1, C-C (Plugged) Group 1 or MDO Group 1 in accordance with DOC PS 1
   - 3.3. Single Floor in accordance with DOC PS 1 or DOC PS 2

b. Minimum thickness $^{15}/_{32}$ inch, except crawl space sheathing may be $^{3}/_{8}$ inch for face grain across studs 16 inches on center and maximum 2-foot depth of unequal fill.

c. For this fill height, thickness and grade combination, panels that are continuous over less than three spans (across less than three stud spacings) require blocking 16 inches above the bottom plate. Offset adjacent blocks and fasten through studs with two 16d corrosion-resistant nails at each end.

R404.4.10 Backfill placement. Backfill shall be placed in accordance with Section R404.1.7.

R404.4.11 Drainage and dampproofing/waterproofing. ICF foundation basements shall be drained and dampproofed/waterproofed in accordance with Sections R405 and R406.

R404.5 Retaining walls. Retaining walls that are not laterally supported at the top and that retain in excess of 24 inches (610 mm) of unbalanced fill shall be designed to ensure stability against overturning, sliding, excessive foundation pressure and water uplift. Retaining walls shall be designed for a safety factor of 1.5 against lateral sliding and overturning.

SECTION R405
FOUNDATION DRAINAGE

R405.1 Concrete or masonry foundations. Drains shall be provided around all concrete or masonry foundations that retain earth and enclose habitable or usable spaces located below grade. Drainage tiles, gravel or crushed stone drains, perforated pipe or other approved systems or materials shall be installed at or below the area to be protected and shall discharge by gravity or mechanical means into an approved drainage system. Gravel or crushed stone drains shall extend at least 1 foot (305 mm) beyond the outside edge of the footing and 6 inches (152 mm) above the top of the footing and be covered with an approved filter membrane material. The top of open joints of drain tiles shall be protected with strips of building paper, and the drainage tiles or perforated pipe shall be placed on a minimum of 2 inches (51 mm) of washed gravel or crushed rock at least one sieve size

TABLE R404.4(1)
5.5-INCH THICK FLAT ICF FOUNDATION WALLS[a, b, c, d]

HEIGHT OF BASEMENT WALL (feet)	MAXIMUM UNBALANCED BACKFILL HEIGHT[e] (feet)	MINIMUM VERTICAL REINFORCEMENT SIZE AND SPACING		
		Soil classes[f] and design lateral soil load (psf per foot of depth)		
		GW, GP, SW and SP 30	GM, GC, SM, SM-SC and ML 45	SC, ML-CL and inorganic CL 60
8	4	#4@48″	#4@48″	#4@48″
	5	#4@48″	#3@12″; #4@22″; #5@32″	#3@8″; #4@14″; #5@20″; #6@26″
	6	#3@12″; #4@22″; #5@30″	#3@8″; #4@14″; #5@20″; #6@24″	#3@6″; #4@10″: #5@14″; #6@20″
	7	#3@8″; #4@14″; #5@22″; #6@26″	#3@5″; #4@10″; #5@14″; #6@18″	#3@4″; #4@6″; #5@10″; #6@14″
9	4	#4@48″	#4@48″	#4@48″
	5	#4@48″	#3@12″; #4@20″; #5@28″; #6@36″	#3@8″; #4@14″; #5@20″; #6@22″
	6	#3@10″; #4@20″; #5@28″; #6@34″	#3@6″; #4@12″; #5@18″; #6@20″	#4@8″; #5@14″; #6@16″
	7	#3@8″; #4@14″; #5@20″; #6@22″	#4@8″; #5@12″; #6@16″	#4@6″; #5@10″; #6@12″
	8	#3@6″; #4@10″; #5@14″; #6@16″	#4@6″; #5@10″; #6@12″	#4@4″; #5@6″; #6@8″
10	4	#4@48″	#4@48″	#4@48″
	5	#4@48″	#3@10″; #4@18″; #5@26″; #6@30″	#3@6″; #4@14″; #5@18″; #6@20″
	6	#3@10″; #4@18″; #5@24″; #6@30″	#3@6″; #4@12″; #5@16″; #6@18″	#3@4″; #4@8″; #5@12″; #6@14″
	7	#3@6″; #4@12″; #5@16″; #6@18″	#3@4″; #4@8″; #5@12″	#4@6″; #5@8″; #6@10″
	8	#4@8″; #5@12″; #6@14″	#4@6″; #5@8″; #6@12″	#4@4″; #5@6″; #6@8″
	9	#4@6″; #5@10″; #6@12″	#4@4″; #5@6″; #6@8″	#5@4″; #6@6″

For SI: 1 inch = 25.4 mm, 1 foot = 304.8 mm, 1 pound per square inch = 6.895 kPa, 1 pound per square foot = 0.0479 kPa.

a. This table is based on concrete with a minimum specified concrete strength of 2500 psi, reinforcing steel with a minimum yield strength of 40,000 psi. When reinforcing steel with a minimum yield strength of 60,000 psi is used, the spacing of the reinforcement shall be increased to 1.5 times the spacing value in the table but in no case greater than 48 inches on center.

b. This table is not intended to prohibit the use of an ICF manufacturer's tables based on engineering analysis in accordance with ACI 318.

c. Deflection criteria: $L/240$.

d. Interpolation between rebar sizes and spacing is not permitted.

e. Unbalanced backfill height is the difference in height of the exterior and interior finished ground. Where an interior concrete slab is provided, the unbalanced backfill height shall be measured from the exterior finished ground level to the top of the interior concrete slab.

f. Soil classes are in accordance with the Unified Soil Classification System. Refer to Table R405.1.

larger than the tile joint opening or perforation and covered with not less than 6 inches (152 mm) of the same material.

Exception: A drainage system is not required when the foundation is installed on well-drained ground or sand-gravel mixture soils according to the Unified Soil Classification System, Group I Soils, as detailed in Table R405.1.

R405.2 Wood foundations. Wood foundations enclosing habitable or usable spaces located below grade shall be adequately drained in accordance with Sections R405.2.1 through R405.2.3.

R405.2.1 Base. A porous layer of gravel, crushed stone or coarse sand shall be placed to a minimum thickness of 4 inches (102 mm) under the basement floor. Provision shall be made for automatic draining of this layer and the gravel or crushed stone wall footings.

R405.2.2 Moisture barrier. A 6-mil-thick (0.15 mm) polyethylene moisture barrier shall be applied over the porous layer with the basement floor constructed over the polyethylene.

R405.2.3 Drainage system. In other than Group I soils, a sump shall be provided to drain the porous layer and footings.

TABLE R404.4(2)
7.5-INCH-THICK FLAT ICF FOUNDATION WALLS[a, b, c, d, e]

HEIGHT OF BASEMENT WALL (feet)	MAXIMUM UNBALANCED BACKFILL HEIGHT[f] (feet)	MINIMUM VERTICAL REINFORCEMENT SIZE AND SPACING		
		Soil classes[g] and design lateral soil load (psf per foot of depth)		
		GW, GP, SW and SP 30	GM, GC, SM, SM-SC and ML 45	SC, ML-CL and inorganic CL 60
8	6	N/R	N/R	#3@6″; #4@12″; #5@18″; #6@24″
	7	N/R	#3@8″; #4@14″; #5@20″; #6@28″	#3@6″; #4@10″; #5@16″; #6@20″
9	6	N/R	N/R	#3@8″; #4@14″; #5@20″; #6@28″
	7	N/R	#3@6″; #4@12″; #5@18″; #6@26″	#3@4″; #4@8″; #5@14″; #6@18″
	8	#3@8″; #4@14″; #5@22″; #6@28″	#3@4″; #4@8″; #5@14″; #6@18″	#3@4″; #4@6″; #5@10″; #6@14″
10	6	N/R	N/R	#3@6″; #4@12″; #5@18″; #6@26″
	7	N/R	#3@6″; #4@12″; #5@18″; #6@24″	#3@4″; #4@8″; #5@12″; #6@18″
	8	#3@6″; #4@12″; #5@20″; #6@26″	#3@4″; #4@8″; #5@12″; #6@16″	#3@4″; #4@6″; #5@8″; #6@12″
	9	#3@6″; #4@10″; #5@14″; #6@20″	#3@4″; #4@6″; #5@10″; #6@12″	#4@4″; #5@6″; #6@10″

For SI: 1 inch = 25.4 mm, 1 foot = 304.8 mm, 1 pound per square inch = 6.895 kPa, 1 pound per square foot = 0.0479 kPa.

a. This table is based on concrete with a minimum specified concrete strength of 2500 psi, reinforcing steel with a minimum yield strength of 40,000 psi. When reinforcing steel with a minimum yield strength of 60,000 psi is used, the spacing of the reinforcement shall be increased to 1.5 times the spacing value in the table.

b. This table is not intended to prohibit the use of an ICF manufacturer's tables based on engineering analysis in accordance with ACI 318.

c. N/R denotes "not required."

d. Deflection criteria: $L/240$.

e. Interpolation between rebar sizes and spacing is not permitted.

f. Unbalanced backfill height is the difference in height of the exterior and interior finished ground. Where an interior concrete slab is provided, the unbalanced backfill height shall be measured from the exterior finished ground level to the top of the interior concrete slab.

The sump shall be at least 24 inches (610 mm) in diameter or 20 inches square (0.0129 m^2), shall extend at least 24 inches (610 mm) below the bottom of the basement floor and shall be capable of positive gravity or mechanical drainage to remove any accumulated water. The drainage system shall discharge into an approved sewer system or to daylight.

SECTION R406
FOUNDATION WATERPROOFING AND DAMPPROOFING

R406.1 Concrete and masonry foundation dampproofing. Except where required by Section R406.2 to be waterproofed, foundation walls that retain earth and enclose interior spaces and floors below grade shall be dampproofed from the top of the footing to the finished grade. Masonry walls shall have not less than $^3/_8$ inch (9.5 mm) portland cement parging applied to the exterior of the wall. The parging shall be dampproofed in accordance with one of the following:

1. Bituminous coating.
2. 3 pounds per square yard (1.63 kg/m^2) of acrylic modified cement.
3. 1/8-inch (3.2 mm) coat of surface-bonding cement complying with ASTM C 887.
4. Any material permitted for waterproofing in Section R406.2.
5. Other approved methods or materials.

Exception: Parging of unit masonry walls is not required where a material is approved for direct application to the masonry.

Concrete walls shall be dampproofed by applying any one of the above listed dampproofing materials or any one of the waterproofing materials listed in Section R406.2 to the exterior of the wall.

R406.2 Concrete and masonry foundation waterproofing. In areas where a high water table or other severe soil-water conditions are known to exist, exterior foundation walls that retain earth and enclose interior spaces and floors below grade shall be waterproofed from the top of the footing to the finished grade. Walls shall be waterproofed in accordance with one of the following:

1. 2-ply hot-mopped felts.
2. 55 pound (25 kg) roll roofing.
3. 6-mil (0.15 mm) polyvinyl chloride.
4. 6-mil (0.15 mm) polyethylene.
5. 40-mil (1 mm) polymer-modified asphalt.

TABLE R404.4(3)
9.5-INCH-THICK FLAT ICF FOUNDATION WALLS[a, b, c, d, e]

HEIGHT OF BASEMENT WALL (feet)	MAXIMUM UNBALANCED BACKFILL HEIGHT[f] (feet)	MINIMUM VERTICAL REINFORCEMENT SIZE AND SPACING		
		Soil classes[g] and design lateral soil load (psf per foot of depth)		
		GW, GP, SW and SP 30	GM, GC, SM, SM-SC and ML 45	SC, ML-CL and inorganic CL 60
8	7	N/R	N/R	N/R
9	6	N/R	N/R	N/R
	7	N/R	N/R	#3@6″; #4@12″; #5@18″; #6@26″
	8	N/R	#3@6″; #4@12″; #5@18″; #6@26″	#3@4″; #4@8″; #5@14″; #6@18″
10	5	N/R	N/R	N/R
	6	N/R	N/R	N/R
	7	N/R	N/R	#3@6″; #4@10″; #5@18″; #6@24″
	8	N/R	#3@6″; #4@12″; #5@16″; #6@24″	#3@4″; #4@8″; #5@12″; #6@16″
	9	#3@4″; #4@10″; #5@14″; #6@20″	#3@4″; #4@8″; #5@12″; #6@18″	#3@4″; #4@6″; #5@10″; #6@12″

For SI: 1 inch = 25.4 mm, 1 foot = 304.8 mm, 1 pound per square inch = 6.895 kPa, 1 pound per square foot = 0.0479 kPa.

a. This table is based on concrete with a minimum specified concrete strength of 2500 psi, reinforcing steel with a minimum yield strength of 40,000 psi. When reinforcing steel with a minimum yield strength of 60,000 psi is used, the spacing of the reinforcement shall be increased to 1.5 times the spacing value in the table.

b. This table is not intended to prohibit the use of an ICF manufacturer's tables based on engineering analysis in accordance with ACI 318.

c. N/R denotes "not required."

d. Deflection criteria: *L*/240.

e. Interpolation between rebar sizes and spacing is not permitted.

f. Unbalanced backfill height is the difference in height of the exterior and interior finished ground. Where an interior concrete slab is provided, the unbalanced backfill height shall be measured from the exterior finished ground level to the top of the interior concrete slab.

g. Soil classes are in accordance with the Unified Soil Classification System. Refer to Table R405.1.

6. 60-mil (1.5 mm) flexible polymer cement.
7. $^1/_8$ inch (3 mm) cement-based, fiber-reinforced, waterproof coating.
8. 60-mil (0.22 mm) solvent-free liquid-applied synthetic rubber.

Exception: Organic-solvent-based products such as hydrocarbons, chlorinated hydrocarbons, ketones and esters shall not be used for ICF walls with expanded polystyrene form material. Use of plastic roofing cements, acrylic coatings, latex coatings, mortars and pargings to seal ICF walls is permitted. Cold-setting asphalt or hot asphalt shall conform to type C of ASTM D 449. Hot asphalt shall be applied at a temperature of less than 200°F (93°C).

All joints in membrane waterproofing shall be lapped and sealed with an adhesive compatible with the membrane.

R406.3 Dampproofing for wood foundations. Wood foundations enclosing habitable or usable spaces located below grade shall be dampproofed in accordance with Sections R406.3.1 through R406.3.4.

R406.3.1 Panel joint sealed. Plywood panel joints in the foundation walls shall be sealed full length with a caulking compound capable of producing a moisture-proof seal under the conditions of temperature and moisture content at which it will be applied and used.

R406.3.2 Below-grade moisture barrier. A 6-mil-thick (0.15 mm) polyethylene film shall be applied over the below-grade portion of exterior foundation walls prior to backfilling. Joints in the polyethylene film shall be lapped 6 inches (152 mm) and sealed with adhesive. The top edge of the polyethylene film shall be bonded to the sheathing to form a seal. Film areas at grade level shall be protected from mechanical damage and exposure by a pressure preservatively treated lumber or plywood strip attached to the wall several inches above finish grade level and extending approximately 9 inches (229 mm) below grade. The joint between the strip and the wall shall be caulked full length prior to fastening the strip to the wall. Other coverings appropriate to the architectural treatment may also be used. The polyethylene film shall extend down to the bottom of the wood footing plate but shall not overlap or extend into the gravel or crushed stone footing.

R406.3.3 Porous fill. The space between the excavation and the foundation wall shall be backfilled with the same material used for footings, up to a height of 1 foot (305 mm) above the footing for well-drained sites, or one-half the total back-fill height for poorly drained sites. The porous fill shall be covered with strips of 30-pound (13.6 kg) asphalt paper or 6-mil (0.15 mm) polyethylene to permit water seepage while avoiding infiltration of fine soils.

TABLE R404.4(4)
WAFFLE GRID ICF FOUNDATION WALLS[a, b, c, d, e]

MINIMUM NOMINAL WALL THICKNESS[f] (inches)	HEIGHT OF BASEMENT WALL (feet)	MAXIMUM UNBALANCED BACKFILL HEIGHT[g] (feet)	MINIMUM VERTICAL REINFORCEMENT SIZE AND SPACING		
			Soil classes[h] and design lateral soil load (psf per foot of depth)		
			GW, GP, SW and SP 30	GM, GC, SM, SM-SC and ML 45	SC, ML-CL and Inorganic CL 60
6	8	4	#4@48″	#3@12″; #4@24″	#3@12″
		5	#3@12″; #5@24″	#4@12″	#7@12″
		6	#4@12″	Design required	Design required
		7	#7@12″	Design required	Design required
	9	4	#4@48″	#3@12″; #5@24″	#3@12″
		5	#3@12″	#4@12″	Design required
		6	#5@12″	Design required	Design required
		7	Design required	Design required	Design required
	10	4	#4@48″	#4@12″	#5@12″
		5	#3@12″	Design required	Design required
		6	Design required	Design required	Design required
		7	Design required	Design required	Design required
8	8	4	N/R	N/R	N/R
		5	N/R	#3@12″; #4@24″; #5@36″	#3@12″; #5@24″
		6	#3@12″; #4@24″; #5@36″	#4@12″; #5@24″	#4@12″
		7	#3@12″; #6@24″	#4@12″	#5@12″
	9	4	N/R	N/R	N/R
		5	N/R	#3@12″; #5@24″	#3@12″; #5@24″
		6	#3@12″; #4@24″	#4@12″	#4@12″
		7	#4@12″; #5@24″	#5@12″	#5@12″
		8	#4@12″	#5@12″	#8@12″
	10	4	N/R	#3@12″; #4@24″; #6@36″	#3@12″; #5@24″
		5	N/R	#3@12″; #4@24″; #6@36″	#4@12″; #5@24″
		6	#3@12″; #5@24″	#4@12″	#5@12″
		7	#4@12″	#5@12″	#6@12″
		8	#4@12″	#6@12″	Design required
		9	#5@12″	Design required	Design required

For SI: 1 inch = 25.4 mm, 1 foot = 304.8 mm, 1 pound per square inch = 6.895 kPa, 1 pound per square foot = 0.0479 kPa.

a. This table is based on concrete with a minimum specified concrete strength of 2500 psi, reinforcing steel with a minimum yield strength of 40,000 psi. When reinforcing steel with a minimum yield strength of 60,000 psi is used, the spacing of the reinforcement shall be increased 12 inches but in no case greater than 48 inches on center.

b. This table is not intended to prohibit the use of an ICF manufacturer's tables based on engineering analysis in accordance with ACI 318.

c. N/R denotes "not required."

d. Deflection criteria: $L/240$.

e. Interpolation between rebar sizes and spacing is not permitted.

f. Refer to Table R611.4(2) for wall dimensions.

g. Unbalanced backfill height is the difference in height of the exterior and interior finished ground. Where an interior concrete slab is provided, the unbalanced backfill height shall be measured from the exterior finished ground level to the top of the interior concrete slab.

h. Soil classes are in accordance with the Unified Soil Classification System. Refer to Table R405.1.

TABLE R404.4(5)
SCREEN-GRID ICF FOUNDATION WALLS[a, b c, d, e]

MINIMUM NOMINAL WALL THICKNESS[f] (inches)	HEIGHT OF BASEMENT WALL (feet)	MAXIMUM UNBALANCED BACKFILL HEIGHT[g] (feet)	MINIMUM VERTICAL REINFORCEMENT SIZE AND SPACING		
			Soil classes[h] and design lateral soil load (psf per foot of depth)		
			GW, GP, SW and SP 30	GM, GC, SM, SM-SC and ML 45	SC, ML-CL and Inorganic CL 60
6	8	4	#4@48″	#3@12″; #4@24″; #5@36″	#3@12″; #5@24″
		5	#3@12″; #4@24″	#3@12″	#4@12″
		6	#4@12″	#5@12″	Design required
		7	#4@12″	Design required	Design required
	9	4	#4@48″	#3@12″; #4@24″	#3@12″; #6@24″
		5	#3@12″; #5@24″	#4@12″	#7@12″
		6	#4@12″	Design required	Design required
		7	Design required	Design required	Design required
		8	Design required	Design required	Design required
	10	4	#4@48″	#3@12″; #5@24″	#3@12″
		5	#3@12″	#4@12″	#7@12″
		6	#4@12″	Design required	Design required
		7	Design required	Design required	Design required
		8	Design required	Design required	Design required

For SI: 1 inch = 25.4 mm, 1 foot = 304.8 mm, 1 pound per square inch = 6.895 kPa, 1 pound per square foot = 0.0479 kPa.

a. This table is based on concrete with a minimum specified concrete strength of 2500 psi, reinforcing steel with a minimum yield strength of 40,000 psi. When reinforcing steel with a minimum yield strength of 60,000 psi is used, the spacing of the reinforcement in the shaded cells shall be increased 12 inches.

b. This table is not intended to prohibit the use of an ICF manufacturer's tables based on engineering analysis in accordance with ACI 318.

c. N/R denotes "not required."

d. Deflection criteria: *L*/240.

e. Interpolation between rebar sizes and spacing is not permitted.

f. Refer to Table R611.4(2) for wall dimensions.

g. Unbalanced backfill height is the difference in height of the exterior and interior finished ground. Where an interior concrete slab is provided, the unbalanced backfill height shall be measured from the exterior finished ground level to the top of the interior concrete slab.

h. Soil classes are in accordance with the Unified Soil Classification System. Refer to Table R405.1.

R406.3.4 Backfill. The remainder of the excavated area shall be backfilled with the same type of soil as was removed during the excavation.

SECTION R407
COLUMNS

R407.1 Wood column protection. Wood columns shall be protected against decay as set forth in Section R319.

R407.2 Steel column protection. All surfaces (inside and outside) of steel columns shall be given a shop coat of rust-inhibitive paint, except for corrosion-resistant steel and steel treated with coatings to provide corrosion resistance.

R407.3 Structural requirements. The columns shall be restrained to prevent lateral displacement at the bottom end. Wood columns shall not be less in nominal size than 4 inches by 4 inches (102 mm by 102 mm) and steel columns shall not be less than 3-inch-diameter (76 mm) standard pipe or approved equivalent.

Exception: In Seismic Design Categories A, B and C columns no more than 48 inches (1219 mm) in height on a pier or footing are exempt from the bottom end lateral displacement requirement within underfloor areas enclosed by a continuous foundation.

SECTION R408
UNDER-FLOOR SPACE

R408.1 Ventilation. The under-floor space between the bottom of the floor joists and the earth under any building (except space occupied by a basement) shall have ventilation openings through foundation walls or exterior walls. The minimum net area of ventilation openings shall not be less than 1 square foot (0.0929 m^2) for each 150 square feet (14 m^2) of under-floor space area. One such ventilating opening shall be within 3 feet (914 mm) of each corner of the building.

R408.2 Openings for under-floor ventilation. The minimum net area of ventilation openings shall not be less than 1 square foot (0.0929 m^2) for each 150 square feet (14 m^2) of under-floor area. One ventilating opening shall be within 3 feet (914 mm) of each corner of the building. Ventilation openings shall be covered for their height and width with any of the following

TABLE R405.1
PROPERTIES OF SOILS CLASSIFIED ACCORDING TO THE UNIFIED SOIL CLASSIFICATION SYSTEM

SOIL GROUP	UNIFIED SOIL CLASSIFICATION SYSTEM SYMBOL	SOIL DESCRIPTION	DRAINAGE CHARACTERISTICS[a]	FROST HEAVE POTENTIAL	VOLUME CHANGE POTENTIAL EXPANSION[b]
Group I	GW	Well-graded gravels, gravel sand mixtures, little or no fines	Good	Low	Low
	GP	Poorly graded gravels or gravel sand mixtures, little or no fines	Good	Low	Low
	SW	Well-graded sands, gravelly sands, little or no fines	Good	Low	Low
	SP	Poorly graded sands or gravelly sands, little or no fines	Good	Low	Low
	GM	Silty gravels, gravel-sand-silt mixtures	Good	Medium	Low
	SM	Silty sand, sand-silt mixtures	Good	Medium	Low
Group II	GC	Clayey gravels, gravel-sand-clay mixtures	Medium	Medium	Low
	SC	Clayey sands, sand-clay mixture	Medium	Medium	Low
	ML	Inorganic silts and very fine sands, rock flour, silty or clayey fine sands or clayey silts with slight plasticity	Medium	High	Low
	CL	Inorganic clays of low to medium plasticity, gravelly clays, sandy clays, silty clays, lean clays	Medium	Medium	Medium to Low
Group III	CH	Inorganic clays of high plasticity, fat clays	Poor	Medium	High
	MH	Inorganic silts, micaceous or diatomaceous fine sandy or silty soils, elastic silts	Poor	High	High
Group IV	OL	Organic silts and organic silty clays of low plasticity	Poor	Medium	Medium
	OH	Organic clays of medium to high plasticity, organic silts	Unsatisfactory	Medium	High
	Pt	Peat and other highly organic soils	Unsatisfactory	Medium	High

For SI: 1 inch = 25.4 mm.

a. The percolation rate for good drainage is over 4 inches per hour, medium drainage is 2 inches to 4 inches per hour, and poor is less than 2 inches per hour.

b. Soils with a low potential expansion typically have a plasticity index (PI) of 0 to 15, soils with a medium potential expansion have a PI of 10 to 35 and soils with a high potential expansion have a PI greater than 20.

materials provided that the least dimension of the covering shall not exceed $^1/_4$ inch (6.4 mm):

1. Perforated sheet metal plates not less than 0.070 inch (1.8 mm) thick.
2. Expanded sheet metal plates not less than 0.047 inch (1.2 mm) thick.
3. Cast-iron grill or grating.
4. Extruded load-bearing brick vents.
5. Hardware cloth of 0.035 inch (0.89 mm) wire or heavier.
6. Corrosion-resistant wire mesh, with the least dimension being $^1/_8$ inch (3.2 mm).

R408.3 Unvented crawl space. Ventilation openings in under-floor spaces specified in Sections R408.1 and R408.2 shall not be required where:

1. Exposed earth is covered with a continuous vapor retarder. Joints of the vapor retarder shall overlap by 6 inches (152 mm) and shall be sealed or taped. The edges of the vapor retarder shall extend at least 6 inches (152 mm) up the stem wall and shall be attached and sealed to the stem wall; and
2. One of the following is provided for the under-floor space:
   - 2.1. Continuously operated mechanical exhaust ventilation at a rate equal to 1 cfm (0.47 L/s) for each 50 ft^2 (4.7 m^2) of crawlspace floor area, including an air pathway to the common area (such as a duct or transfer grille), and perimeter walls insulated in accordance with Section N1102.2.8;
   - 2.2. Conditioned air supply sized to deliver at a rate equal to 1 cfm (0.47 L/s) for each 50 ft^2 (4.7 m^2) of under-floor area, including a return air pathway to the common area (such as a duct or transfer grille), and perimeter walls insulated in accordance with Section N1102.2.8;

2.3. Plenum complying with Section M1601.4, if under-floor space is used as a plenum.

R408.4 Access. Access shall be provided to all under-floor spaces. Access openings through the floor shall be a minimum of 18 inches by 24 inches (457 mm by 610 mm). Openings through a perimeter wall shall be not less than 16 inches by 24 inches (407 mm by 610 mm). When any portion of the through-wall access is below grade, an areaway not less than 16 inches by 24 inches (407 mm by 610 mm) shall be provided. The bottom of the areaway shall be below the threshold of the access opening. Through wall access openings shall not be located under a door to the residence. See Section M1305.1.4 for access requirements where mechanical equipment is located under floors.

R408.5 Removal of debris. The under-floor grade shall be cleaned of all vegetation and organic material. All wood forms used for placing concrete shall be removed before a building is occupied or used for any purpose. All construction materials shall be removed before a building is occupied or used for any purpose.

R408.6 Finished grade. The finished grade of under-floor surface may be located at the bottom of the footings; however, where there is evidence that the groundwater table can rise to within 6 inches (152 mm) of the finished floor at the building perimeter or where there is evidence that the surface water does not readily drain from the building site, the grade in the under-floor space shall be as high as the outside finished grade, unless an approved drainage system is provided.

R408.7 Flood resistance. For buildings located in areas prone to flooding as established in Table R301.2(1):

1. Walls enclosing the under-floor space shall be provided with flood openings in accordance with Section R324.2.2.
2. The finished ground level of the under-floor space shall be equal to or higher than the outside finished ground level.

   Exception: Under-floor spaces that meet the requirements of FEMA/FIA TB 11-1.

APPENDIX F
RADON CONTROL METHODS

SECTION AF101
SCOPE

AF101.1 General. This appendix contains requirements for new construction in jurisdictions where radon-resistant construction is required.

Inclusion of this appendix by jurisdictions shall be determined through the use of locally available data or determination of Zone 1 designation in Figure AF101.

SECTION AF102
DEFINITIONS

AF102.1 General. For the purpose of these requirements, the terms used shall be defined as follows:

SUBSLAB DEPRESSURIZATION SYSTEM (Passive). A system designed to achieve lower sub-slab air pressure relative to indoor air pressure by use of a vent pipe routed through the conditioned space of a building and connecting the sub-slab area with outdoor air, thereby relying on the convective flow of air upward in the vent to draw air from beneath the slab.

SUBSLAB DEPRESSURIZATION SYSTEM (Active). A system designed to achieve lower sub-slab air pressure relative to indoor air pressure by use of a fan-powered vent drawing air from beneath the slab.

DRAIN TILE LOOP. A continuous length of drain tile or perforated pipe extending around all or part of the internal or external perimeter of a basement or crawl space footing.

RADON GAS. A naturally-occurring, chemically inert, radioactive gas that is not detectable by human senses. As a gas, it can move readily through particles of soil and rock and can accumulate under the slabs and foundations of homes where it can easily enter into the living space through construction cracks and openings.

SOIL-GAS-RETARDER. A continuous membrane of 6-mil (0.15 mm) polyethylene or other equivalent material used to retard the flow of soil gases into a building.

SUBMEMBRANE DEPRESSURIZATION SYSTEM. A system designed to achieve lower-sub-membrane air pressure relative to crawl space air pressure by use of a vent drawing air from beneath the soil-gas-retarder membrane.

SECTION AF103
REQUIREMENTS

AF103.1 General. The following construction techniques are intended to resist radon entry and prepare the building for post-construction radon mitigation, if necessary (see Figure AF102). These techniques are required in areas where designated by the jurisdiction.

AF103.2 Subfloor preparation. A layer of gas-permeable material shall be placed under all concrete slabs and other floor systems that directly contact the ground and are within the walls of the living spaces of the building, to facilitate future installation of a sub-slab depressurization system, if needed. The gas-permeable layer shall consist of one of the following:

1. A uniform layer of clean aggregate, a minimum of 4 inches (102 mm) thick. The aggregate shall consist of material that will pass through a 2-inch (51 mm) sieve and be retained by a $^1/_4$-inch (6.4 mm) sieve.
2. A uniform layer of sand (native or fill), a minimum of 4 inches (102 mm) thick, overlain by a layer or strips of geotextile drainage matting designed to allow the lateral flow of soil gases.
3. Other materials, systems or floor designs with demonstrated capability to permit depressurization across the entire sub-floor area.

AF103.3 Soil-gas-retarder. A minimum 6-mil (0.15 mm) [or 3-mil (0.075 mm) cross-laminated] polyethylene or equivalent flexible sheeting material shall be placed on top of the gas-permeable layer prior to casting the slab or placing the floor assembly to serve as a soil-gas-retarder by bridging any cracks that develop in the slab or floor assembly and to prevent concrete from entering the void spaces in the aggregate base material. The sheeting shall cover the entire floor area with separate sections of sheeting lapped at least 12 inches (305 mm). The sheeting shall fit closely around any pipe, wire or other penetrations of the material. All punctures or tears in the material shall be sealed or covered with additional sheeting.

AF103.4 Entry routes. Potential radon entry routes shall be closed in accordance with Sections AF103.4.1 through AF103.4.10.

AF103.4.1 Floor openings. Openings around bathtubs, showers, water closets, pipes, wires or other objects that penetrate concrete slabs or other floor assemblies shall be filled with a polyurethane caulk or equivalent sealant applied in accordance with the manufacturer's recommendations.

AF103.4.2 Concrete joints. All control joints, isolation joints, construction joints and any other joints in concrete slabs or between slabs and foundation walls shall be sealed with a caulk or sealant. Gaps and joints shall be cleared of loose material and filled with polyurethane caulk or other elastomeric sealant applied in accordance with the manufacturer's recommendations.

AF103.4.3 Condensate drains. Condensate drains shall be trapped or routed through nonperforated pipe to daylight.

AF103.4.4 Sumps. Sump pits open to soil or serving as the termination point for sub-slab or exterior drain tile loops shall be covered with a gasketed or otherwise sealed lid. Sumps used as the suction point in a sub-slab depressurization system shall have a lid designed to accommodate the vent pipe. Sumps used as a floor drain shall have a lid equipped with a trapped inlet.

AF103.4.5 Foundation walls. Hollow block masonry foundation walls shall be constructed with either a continuous course of solid masonry, one course of masonry grouted solid, or a solid concrete beam at or above finished ground surface to prevent passage of air from the interior of the wall into the living space. Where a brick veneer or other masonry ledge is installed, the course immediately below that ledge shall be sealed. Joints, cracks or other openings around all penetrations of both exterior and interior surfaces of masonry block or wood foundation walls below the ground surface shall be filled with polyurethane caulk or equivalent sealant. Penetrations of concrete walls shall be filled.

AF103.4.6 Dampproofing. The exterior surfaces of portions of concrete and masonry block walls below the ground surface shall be dampproofed in accordance with Section R406 of this code.

AF103.4.7 Air-handling units. Air-handling units in crawl spaces shall be sealed to prevent air from being drawn into the unit.

Exception: Units with gasketed seams or units that are otherwise sealed by the manufacturer to prevent leakage.

AF103.4.8 Ducts. Ductwork passing through or beneath a slab shall be of seamless material unless the air-handling system is designed to maintain continuous positive pressure within such ducting. Joints in such ductwork shall be sealed to prevent air leakage.

Ductwork located in crawl spaces shall have all seams and joints sealed by closure systems in accordance with Section M1601.3.1.

AF103.4.9 Crawl space floors. Openings around all penetrations through floors above crawl spaces shall be caulked or otherwise filled to prevent air leakage.

AF103.4.10 Crawl space access. Access doors and other openings or penetrations between basements and adjoining crawl spaces shall be closed, gasketed or otherwise filled to prevent air leakage.

AF103.5 Passive submembrane depressurization system. In buildings with crawl space foundations, the following components of a passive sub-membrane depressurization system shall be installed during construction.

Exception: Buildings in which an approved mechanical crawl space ventilation system or other equivalent system is installed.

AF103.5.1 Ventilation. Crawl spaces shall be provided with vents to the exterior of the building. The minimum net area of ventilation openings shall comply with Section R408.1 of this code.

AF103.5.2 Soil-gas-retarder. The soil in crawl spaces shall be covered with a continuous layer of minimum 6-mil (0.15 mm) polyethylene soil-gas-retarder. The ground cover shall be lapped a minimum of 12 inches (305 mm) at joints and shall extend to all foundation walls enclosing the crawl space area.

AF103.5.3 Vent pipe. A plumbing tee or other approved connection shall be inserted horizontally beneath the sheeting and connected to a 3- or 4-inch-diameter (76 mm or 102 mm) fitting with a vertical vent pipe installed through the sheeting. The vent pipe shall be extended up through the building floors, terminate at least 12 inches (305 mm) above the roof in a location at least 10 feet (3048 mm) away from any window or other opening into the conditioned spaces of the building that is less than 2 feet (610 mm) below the exhaust point, and 10 feet (3048 mm) from any window or other opening in adjoining or adjacent buildings.

AF103.6 Passive subslab depressurization system. In basement or slab-on-grade buildings, the following components of a passive sub-slab depressurization system shall be installed during construction.

AF103.6.1 Vent pipe. A minimum 3-inch-diameter (76 mm) ABS, PVC or equivalent gas-tight pipe shall be embedded vertically into the sub-slab aggregate or other permeable material before the slab is cast. A "T" fitting or equivalent method shall be used to ensure that the pipe opening remains within the sub-slab permeable material. Alternatively, the 3-inch (76 mm) pipe shall be inserted directly into an interior perimeter drain tile loop or through a sealed sump cover where the sump is exposed to the sub-slab aggregate or connected to it through a drainage system.

The pipe shall be extended up through the building floors, terminate at least 12 inches (305 mm) above the surface of the roof in a location at least 10 feet (3048 mm) away from any window or other opening into the conditioned spaces of the building that is less than 2 feet (610 mm) below the exhaust point, and 10 feet (3048 mm) from any window or other opening in adjoining or adjacent buildings.

AF103.6.2 Multiple vent pipes. In buildings where interior footings or other barriers separate the sub-slab aggregate or other gas-permeable material, each area shall be fitted with an individual vent pipe. Vent pipes shall connect to a single vent that terminates above the roof or each individual vent pipe shall terminate separately above the roof.

AF103.7 Vent pipe drainage. All components of the radon vent pipe system shall be installed to provide positive drainage to the ground beneath the slab or soil-gas-retarder.

AF103.8 Vent pipe accessibility. Radon vent pipes shall be accessible for future fan installation through an attic or other area outside the habitable space.

Exception: The radon vent pipe need not be accessible in an attic space where an approved roof-top electrical supply is provided for future use.

AF103.9 Vent pipe identification. All exposed and visible interior radon vent pipes shall be identified with at least one label on each floor and in accessible attics. The label shall read:"Radon Reduction System."

AF103.10 Combination foundations. Combination basement/crawl space or slab-on-grade/crawl space foundations shall have separate radon vent pipes installed in each type of foundation area. Each radon vent pipe shall terminate above the roof or shall be connected to a single vent that terminates above the roof.

AF103.11 Building depressurization. Joints in air ducts and plenums in unconditioned spaces shall meet the requirements of Section M1601. Thermal envelope air infiltration requirements shall comply with the energy conservation provisions

in Chapter 11. Firestopping shall meet the requirements contained in Section R602.8.

AF103.12 Power source. To provide for future installation of an active sub-membrane or sub-slab depressurization system, an electrical circuit terminated in an approved box shall be installed during construction in the attic or other anticipated location of vent pipe fans. An electrical supply shall also be accessible in anticipated locations of system failure alarms.

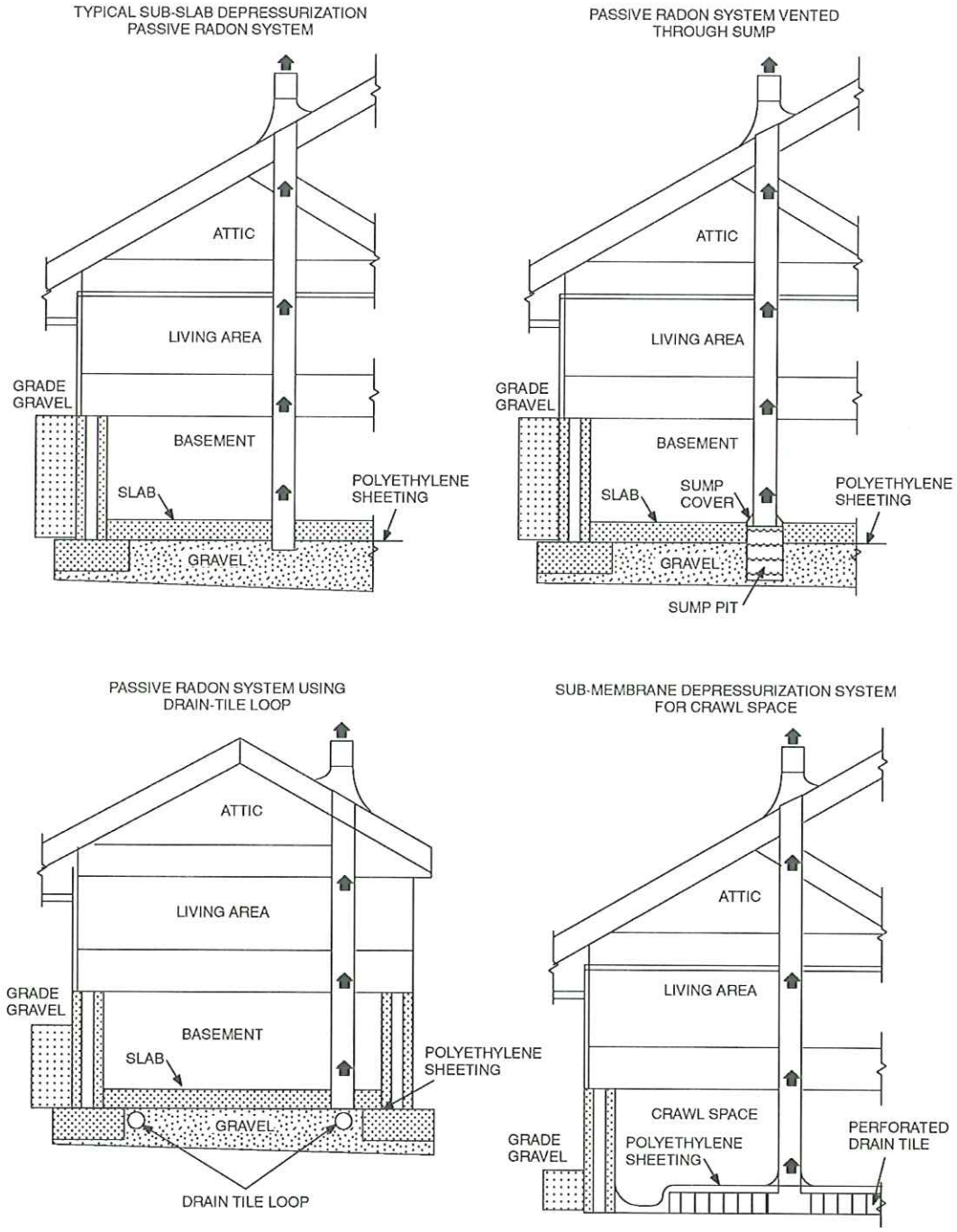

FIGURE AF102
RADON-RESISTANT CONSTRUCTION DETAILS FOR FOUR FOUNDATION TYPES